Lieutenant General Mike Gould
United States Air Force

Superintendent
United States Air Force Academy

Every part of a cadet's experience at the Air Force Academy contributes to our ultimate mission, to produce leaders of character. This handbook is no exception. I encourage you to keep this tool handy throughout your cadet career. Study the course descriptions; examine the various majors. Use this handbook to challenge yourself to take advantage of everything USAFA has to offer. It integrates the classroom, the squadron, and the athletic field into a course of study that will develop you into a scholar-warrior. In a sense, this is just the beginning of what will be a lifetime of education. Starting now, I want you to challenge yourself to excel, because pride is rooted in excellence!

Brigadier General Gregory J. Lengyel
United States Air Force

Commandant of Cadets
United States Air Force Academy

Our mission at USAFA is to educate, train and inspire you to become officers of character. Strength of character allows you to succeed in the face of adversity and get through difficult situations with your values intact. Strong character is the essential quality of great leaders and enables them to inspire others to greatness.

You will be leaders in your organization and will have the opportunity to influence and inspire others. Great leaders are not driven by what they do, but why they do it. Use this handbook to guide you to an academic foundation that you are passionate about. This will not only serve as the basis for what you do now, but will also be the foundation for your professional development as you lead the finest Air Force in the world. Be inspired to inspire!

Brigadier General Dana Born
United States Air Force

Dean of the Faculty
United States Air Force Academy

Your success in the Air Force, and in life as well, will depend in large measure on the knowledge, skills, and responsibilities gained here. Our goal as a faculty is to build your foundation for success with our institutional outcomes so you can develop into a motivated Air Force leader of character who is able to adapt confidently to new situations and who is committed to life-long learning.

This Curriculum Handbook, along with personal interaction with our dedicated faculty members, will guide you in tailoring an academic program to your needs. I urge you to seriously consider the wide range of options available—there is no one right answer for all cadets, so choose the major and elective courses that best match your abilities and interests. Our academic program is challenging and it demands commitment and hard work. However, our graduates consistently report that the USAFA academic program prepared them well for their Air Force duties, and we know it will prepare you just as well. We offer an acknowledged world-class education—it is up to you to make the most of this opportunity.

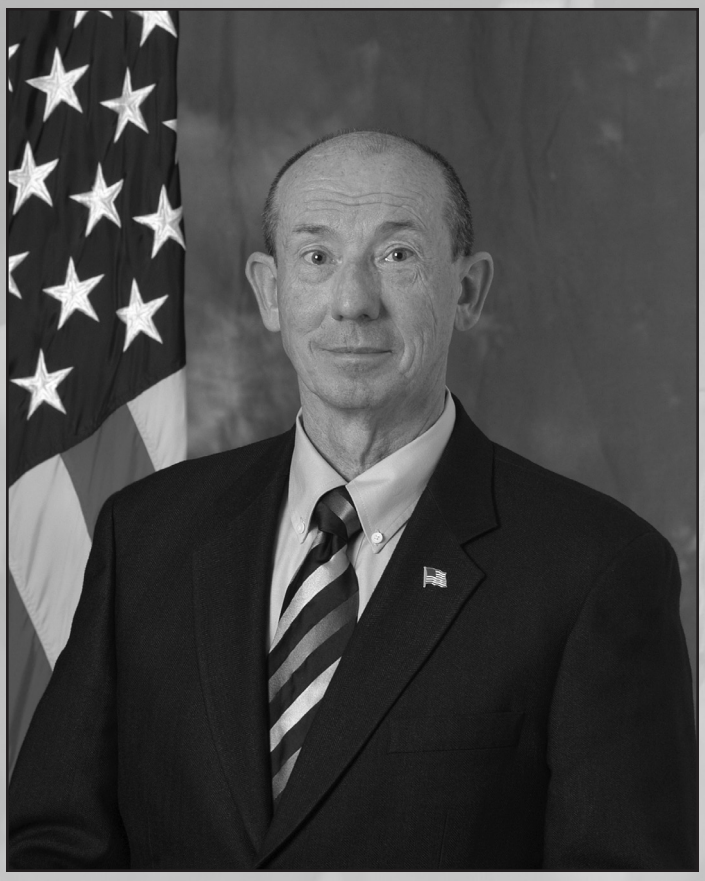

Dr. Hans Mueh
United States Air Force

Director of Athletics
United States Air Force Academy

The opportunities you have as a cadet at the Air Force Academy are without equal. The Academy faculty and staff share one common goal—to help you succeed academically, athletically, and in your military training and leadership development. We challenge you to take advantage of all this great institution has to offer; one step in meeting that challenge is to use this Curriculum Handbook to chart your educational path to ensure you meet your goals for your major any specialization you desire, and ultimately your graduation and continued growth as an officer and a leader of character. Use all the resources available to you in making these educational decisions—your academic advisor, your instructors, coaches, and AOC are all able and willing to help you with this process. We wish you success in these endeavors.

CURRICULUM HANDBOOK

This Handbook Contains General Information Concerning Graduation Requirements, Academic Registration Procedures, Course Offerings, and Academic Programs Effective Fall 2012 at the United States Air Force Academy.

As directed in USAFA Instruction 36-3507, the Office of the Dean of the Faculty publishes this handbook annually. Procedures for initiating changes to this handbook are contained in USAFA Instruction 36-3507. The Curriculum Handbook documents the curriculum of the United States Air Force Academy, as approved by the Academy Board.

This handbook contains information relating to the academic year 2012-2013. Every effort has been made to ensure its accuracy, but USAFA reserves the right to make corrections and changes in any information contained in this and subsequent issues of the Curriculum Handbook or in any of its other publications. Courses of instruction, programs, degree requirements, and any other matters are subject to change.

Information concerning this handbook and additional copies may be obtained from the Curriculum Division, Office of the Associate Dean for Student Academic Affairs (DFR), 2354 Fairchild Drive, Suite 2G13, USAF Academy, Colorado, 80840. The Curriculum Handbook is also available on-line at http://www.usafa.edu/df/dfr/curriculum/handbook.cfm?catname=dfr2 or on the USAFA network at https://eim.usafa.edu/academics/registrar. This handbook was edited by Maj Paul Abair, DFRC, 719-333-2452.

Summary of Changes

This handbook has been substantially revised & requires thorough review. This revision includes the following changes:

ADMINISTRATIVE/PROGRAM/CORE

Updated CSEAP/CSSAP program changes and course equivalencies
Changed Course Drop Timeline policy during lessons 9-20
Added Mil Tng 270/370, Expeditionary Survival & Evasion Skills Training (ESET) as graduation requirement that replaces Global Engagement (Mil Tng 260/360) and Combat Survival Training (Mil Tng 220/420)
Combined Armnshp 491 & 492 into a single two-semester course (3 Sem Hrs)
Changed Character & Leadership Development: Character & Leadership 101/201/301/401
Added guidance on the awarding of grades to USAFA Preparatory School cadets
Added Reading Skills 104, Reading Enhancement for International cadets
Discontinued First Year Experience as a core course
Enables Behavior Science majors to substitute core Math 300 with Beh Sci 231/332
Changed Cyber 466 course description
Added Phy Ed 111/119, 211/222 prereqs for Phy Ed 483, Scuba

INTERDISCIPLINARY

Added Humanities & Social Sciences Religion Studies Minor
Deleted Systems Engineering Management Major and made adjustments to Systems Engineering and Management course options
Changed Ops Rsch 330 name & course description
Removed Math 245 from Ops Rsch option

BASIC SCIENCES

Changed Math 300 core substitute to Math 356 for Basic Science Divisional Major
Allows Biology 210 & Biology 315/315S to count for Biology Major's requirements when both are taken
Added two engineering courses so that Chemistry & Biochemistry majors may qualify for the 62G career field
Changed Chem 222 course offering terms to fall
Changed Chem 230 course offering terms to fall
Changed Chem 325 course offering terms to fall
Changed Chem 350 course offering terms to fall
Changed Chem 381 course offering terms to spring
Changed Chem 431 course offering terms to fall
Changed Chem 440 course offering terms to spring
Changed Chem 445 course offering terms to spring
Changed Chem 465 course offering terms to spring
Changed Chem 491 course offering terms to spring
Changed prerequisites for Math 359 from Math 300 to Math 356 or Math 378
Changed Ops Rsch 417 course description
Changed Computer Science Major's description

Changed Comp Sci 364 to final project instead of final exam
Changed Atmospheric Track, Physics Major, by replacing Meteor 431 with Meteor 331
Changed Meteorology Major's description as guided by the American Meteorological Society

ENGINEERING
Added ECE 210, Principles of Electronic Systems
Changed prereqs of Astro Engr 331
Changed Astro Engr 436/437 descriptions & sequence
Deleted Astro Engr 446 as a depth option
Deleted Astro Engr 452
Deleted Astro Engr 453
Adjusted all references to Aero Engr 442 in the CHB as Advanced Aerodynamics
Changed Engr 311 name & course description
Changed Title and content of ECE 231 and ECE 332
Added Engr Mech 220 to prereqs for Aero Engr 351under certain circumstances
Deleted Engr Mech 220 as prereq & added Engr 101 prereq to Aero Engr 210
Removed psychrometrics from Mech Engr 312, Thermodynamics course description
Removed Mech Engr 341 as a prereq for Mech Engr 467
Removed Mech Engr 341 as a prereq for Mech Engr 441
Changed title & coreq for Mech Engr 468
Changed wording of Mech Engr Option II – encourage Mech Engr course
Changed Systems Engineering Major
Added Sys Engr 311, Systems Engineering II
Added Sys Engr 336, Engineering Econ & Fin Mgt
Added Sys Engr 477, Ops Engineering & Mgt
Changed Sys Engr 301 Course Description
Changed Sys Engr 491/492
Changed Sys Engr 405/406
Changed Space Operations Major's courses

HUMANITIES
Added International History track to the History Major
Revised Humanities Majors to include methodology requirement
Deleted Aviation 499
Deleted Aviation 495
Re-sequenced English Major's courses & updated the major's description
Changed English 341, Literary Criticism to reflect final paper option
Updated English 484 course description to include final paper in place of exam
Updated Fine Art 352 course description to include final project or exam
Revised course description for Fine Art 359, added option for final exam
Revised course description for Fine Art 461…not offered Fall 2012
Revised course description for Fine Art 464, 2-D Studio Art
Deleted Fine Art 463, 3-D Studio Art
Added MSS 360, Comparative Air Forces
Added MSS 367, Weapons of Mass Effect
Changed MSS 462 to MSS 362, Military Innovation & Transformation

Changed MSS 463 to MSS 363, Irregular Warfare & Armed Groups
Changed MSS 491, Military Strategies of the Western Hemisphere
Changed MSS 494, Military Strategies of Africa & the Greater Middle East
Changed MSS 498 course description
Deleted MSS 369
Deleted MSS 402
Deleted MSS 492
Deleted MSS 496
Changed Philosophy Minor to count either Econ 240, Poli Sci 301, 451, or 463
Added Philos 391
Added Philos 392
Added Philos 393
Added Philos 394
Changed Philos 311 offering to fall or spring
Changed Philos 360 offering to fall
Changed Philos 370 offering to fall or spring
Deleted Philos 390
Added Spanish 365 course description & required it as a prereq for all follow-on Spanish courses
Added For Ar Stu 491
Changed Portuguese 151 offering to fall
Added Portuguese 152
Changed Spanish 365 offering to fall or spring

SOCIAL SCIENCES
Added Beh Sci 498, Senior Capstone
Changed Beh Sci 362 offering to fall
Changed Beh Sci 411 offering to spring
Changed Beh Sci 412 offering to fall
Changed Beh Sci 450 offering to spring
Deleted Beh Sci 311
Deleted Beh Sci 361
Deleted Beh Sci 460
Deleted Beh Sci 470
Deleted Beh Sci 472
Deleted Beh Sci 480
Deleted Beh Sci 490
Revised Management Major description
Changed Management Major course sequence
Changed Mgt 303 to allow enrollment by all cadets with DFM department head approval
Changed Management course options to allow 322-level (or above) foreign language course to serve as a Management option
Added requirement: financial management or cost analysis focus must take Mgt 342
Added Mgt 406 spring offering
Changed Mgt 376 to Mgt 478
Changed Mgt 405 offering to fall
Changed Mgt 437 fall offering to Mgt 337 spring offering

Changed Mgt 472 offering to fall
Changed Mgt 498 from 3(2) to 3(1)
Changed Mgt 420
Changed elective for Geoscience Major from Econ 355 to Econ 301
Changed Geoscience Major cognate elective from Beh Sci 350 to Beh Sci 360
Changed Econ 301 offering to fall
Changed Law 340 offering to spring
Changed Poli Sci Major options to include macroeconomics course &/or regional history courses
Changed Pol Sci 300 course description
Changed Pol Sci 445 course description
Changed Pol Sci 479 offering to fall of even years
Changed Ops Rsch Major options 1 or 2 to include Econ 376 or Econ 377

TABLE OF CONTENTS

CHAPTER 1, Introduction *16*

1-1. PURPOSE OF THE CURRICULUM HANDBOOK **16**

1-2. HANDBOOK CONTENTS **16**

1-3. CURRICULUM CHANGE PROPOSALS **16**

1-4. OBJECTIVES OF THE ACADEMY CURRICULUM. **16**

1-5. GRADUATION AND RESIDENCY REQUIREMENTS **18**

1-6. INTERNATIONAL CADETS **19**

CHAPTER 2, Registration *21*

2-1. RESPONSIBILITY FOR REGISTRATION **21**

2-2. ACADEMIC COUNSELING AND ADVISING **22**

Figure 2-1, Academic Program Summary 23

Figure 2-2, Academic Grad Check 24

2-3. PROGRAM PLANNING **25**

2-4. CAMIS **26**

2-5. REGISTRATION PERIODS **28**

2-6. CHANGES AFFECTING FUTURE SEMESTERS **29**

Figure 2-3, Activity Codes 30

2-7. CHANGES AFFECTING CURRENT SEMESTER **31**

2-8. CHANGING AN ACADEMIC PROGRAM SUMMARY **32**

Figure 2-4, Course Drop Timeline 33

2-9. WAIVERS **34**

2-10. INDEPENDENT STUDY COURSES **34**

2-11. SPECIAL TOPICS COURSES **35**

2-12. AUDITING **35**

Figure 2-5, Academic Waiver Request, USAFA Form 69 37

Figure 2-6, Request to Audit Form Letter 38

Figure 2-7, Request for Permission to Enroll in an Independent Study Course, USAFA Form O-498 39

CHAPTER 3, Scheduling *40*

3-1. THE ACADEMIC WEEK **40**

3-2. ACADEMIC COURSE SCHEDULING **40**

3-3. CADET EXCUSAL FROM ACADEMIC TIME **40**

3-4. FINAL EXAMINATIONS **40**

3-5. THE SUMMER **40**

Figure 3-1, Cadet Academic Schedule 41

3-6. COURSES WITH UNUSUAL SCHEDULES **42**

3-7. MINIMUM ENROLLMENT SIZE FOR MAJORS AND CLASSES **44**

CHAPTER 4, Grading *45*
4-1. GRADES AND QUALITY POINTS **45**
4-2. GRADES **45**
4-3. DEPARTED CADET GRADE ASSIGNMENTS **45**
4-4. GRADE CHANGES **45**
4-5. ACADEMIC APPELLATE PROCEDURE **46**
4-6. SPECIAL GRADES **46**
4-7. TRANSFER AND VALIDATION CREDIT **48**
4-8. GRADE POINT AVERAGE **48**
4-9. MAJOR'S GPA **49**
4-10. OVERALL PERFORMANCE AVERAGE **49**
4-11. GRADUATION RECOGNITION **49**
4-12. HONOR LIST REQUIREMENTS **49**
Dean's List 49
Athletic Director's List 49
Commandant's List 50
Superintendent's List 50
CHAPTER 5, Academic Deficiency and Probation *51*
5-1. ACADEMIC DEFICIENCY **51**
5-2. PLACEMENT ON ACADEMIC PROBATION **52**
5-3. REMOVAL FROM ACADEMIC PROBATION **55**
5-4. ACADEMIC REVIEW COMMITTEE RESPONSIBILITIES **56**
5-5. ACADEMIC REVIEW COMMITTEE PREPARATION **57**
5-6. ACADEMIC REVIEW COMMITTEE PROCEDURES **59**
5-7. DISENROLLMENT PROCEDURES **60**
5-8. CLASS ATTENDANCE BY CADETS RECOMMENDED FOR DISENROLLMENT **62**
5-9. WHY SHOULD CADETS WORRY ABOUT ACADEMIC DISENROLLMENT? **62**
5-10. WHAT CAN A CADET DO TO PREVENT ACADEMIC PROBLEMS? **63**
Figure 5-1a, USAFA Form 68, Cadet Academic Deficiency Evaluation and Probation Action Plan 64
Figure 5-1b, Instructions for Completing the USAFA Form 68 67
CHAPTER 6, Special Programs *68*
6-1. CADET SEMESTER EXCHANGE ABROAD PROGRAM (CSEAP) **68**
6-2. CADET SEMESTER STUDY ABROAD PROGRAM (CSSAP) **72**
6-3. SERVICE ACADEMY EXCHANGE PROGRAM **72**
6-4. ENGLISH AS A SECOND LANGUAGE (ESL) PROGRAM **72**
6-5. ACADEMICALLY AT-RISK PROGRAM **77**
6-6. HOSPITAL INSTRUCTION PROGRAM **77**

6-7. EXTRA INSTRUCTION PROGRAM **78**
6-8. ACADEMY SCHOLARS PROGRAM **78**
6-9. SUMMER PROGRAMS. **79**
6-10. BASIC SOARING **82**
6-11. BASIC PARACHUTING **82**
6-12. BASIC CYBER OPERATIONS **82**
6-13. AIRMANSHIP COURSES **83**
6-14. GRADUATE SCHOOL OPPORTUNITIES **83**
6-15. SCHOLARSHIP PREPARATION **85**
6-16. BASIC METEOROLOGY PROGRAM **86**
CHAPTER 7, Core Courses *88*
7-1. ACADEMIC CORE CURRICULUM **88**
7-2. CORE COURSES **88**
Diagram 7-1, Core Curriculum Organization and Sequencing by Content Area and Class Year 89
7-3. CORE REQUIREMENTS **90**
7-4. CORE SEQUENCE **92**
7-5. CORE COURSE NUMBERING **93**
7-6. CORE SUBSTITUTES **93**
7-7. CORE REPLACEMENTS **93**
7-8. PREREQUISITES FOR CORE COURSES **93**
7-9. CORE PREPARATION COURSES **94**
7-10. GRADE PROTECTION **94**
7-11. PHYSICAL EDUCATION COURSES **95**
7-12. USAFA OUTCOMES **96**
Table 7-1. Core Curriculum Outcome Alignment Plan (original) 98
Table 7-2. Alternate Core Curriculum and Outcome Alignment Plan. 100
CHAPTER 8, Academic Programs *101*
8-1. PURPOSE OF THE ACADEMIC PROGRAM SECTION **101**
8-2. HOW TO USE THE ACADEMIC PROGRAM SECTION **101**
8-3. TYPES OF ACADEMIC PROGRAMS **101**
8-4. ACADEMIC PROGRAM REQUIREMENTS **102**
8-5. INITIAL CHOICE OF PROGRAM **102**
8-6. TIMELINE TO DECLARE A MAJOR **103**
8-7. CHANGE OF MAJOR **103**
8-8. HOW DO I CHOOSE AN ACADEMIC PROGRAM? **103**
8-9. HOW DO I DECLARE A MINOR? **104**

8-10. HOW DO I DECLARE AN ACADEMIC MAJOR? 104
8-11. WHAT IF I CHOOSE THE WRONG MAJOR? 104
8-12. HOW CAN I LOSE MY ACADEMIC MAJOR? 104
8-13. CAN I GET MY MAJOR BACK ONCE I HAVE LOST IT? 105
8-14. WHAT IF I CHOOSE TO DECLARE A DIVISIONAL MAJOR? 105
8-15. MULTIPLE MAJORS 105
8-16. HOW DO I DECLARE A DOUBLE MAJOR? 105
8-17. CAN I DECLARE THE BACHELOR OF SCIENCE PROGRAM? 105
8-18. ACCREDITATION 106
CHAPTER 9, Divisional Majors *107*
BASIC SCIENCES 108
GENERAL ENGINEERING 111
HUMANITIES 113
SOCIAL SCIENCES 115
CHAPTER 10, Disciplinary and Interdisciplinary Majors and Minors *117*
AERONAUTICAL ENGINEERING 118
ASTRONAUTICAL ENGINEERING 122
BEHAVIORAL SCIENCES 126
BIOLOGY 131
CHEMISTRY 136
CIVIL ENGINEERING 142
COMPUTER ENGINEERING 146
Figure 10-1, Comp Engr Course Flow Diagram 150
COMPUTER SCIENCE 151
ECONOMICS 155
ELECTRICAL ENGINEERING 158
Figure 10-2, El Engr Course Flow Diagram 162
ENGLISH 163
ENVIRONMENTAL ENGINEERING 165
FOREIGN AREA STUDIES 169
FOREIGN LANGUAGE MINOR 172
GEOSPATIAL SCIENCE 174
HISTORY 179
LEGAL STUDIES 184
MANAGEMENT 186
MATHEMATICS 189

MECHANICAL ENGINEERING **192**
METEOROLOGY **197**
MILITARY & STRATEGIC STUDIES **200**
OPERATIONS RESEARCH **203**
PHILOSOPHY MAJOR **206**
PHILOSOPHY MINOR **208**
PHYSICS **209**
POLITICAL SCIENCE **212**
RELIGION STUDIES MINOR **214**
SPACE OPERATIONS **216**
SYSTEMS ENGINEERING **218**
CHAPTER 11, The Bachelor of Science Program *224*
CHAPTER 12, Course Descriptions *225*
CONTACT HOURS AND SCHEDULING PATTERN CODES **225**
AERONAUTICS **226**
AIRMANSHIP **230**
AREA STUDIES **234**
ASTRONAUTICS **234**
BASIC SCIENCES **237**
BEHAVIORAL SCIENCES **237**
BIOLOGY **242**
CENTER FOR CHARACTER DEVELOPMENT **246**
CHEMISTRY **250**
CIVIL ENGINEERING **255**
COMMISSIONING EDUCATION **260**
ECONOMICS **265**
ELECTRICAL AND COMPUTER ENGINEERING **269**
ENGINEERING **274**
ENGINEERING MECHANICS **275**
ENGLISH **277**
FINE ARTS **281**
FOREIGN AREA STUDIES **283**
FOREIGN LANGUAGES **286**
GEOSPATIAL SCIENCE **292**
HISTORY **294**

HUMANITIES **301**
LAW **303**
MANAGEMENT **306**
MATHEMATICS **311**
MECHANICAL ENGINEERING **317**
METEOROLOGY **319**
MILITARY STRATEGIC STUDIES **321**
MILITARY TRAINING **325**
OPERATIONS RESEARCH **331**
PHILOSOPHY **333**
PHYSICAL EDUCATION **335**
PHYSICS **341**
POLITICAL SCIENCE **345**
READING SKILLS **351**
SOCIAL SCIENCE **352**
SPACE **353**
SPACE OPERATIONS **354**
STUDY SKILLS **354**
SYSTEMS ENGINEERING **355**
CHAPTER 13, Definition of Terms *359*

SECTION I

CHAPTER 1

INTRODUCTION

1-1. PURPOSE OF THE CURRICULUM HANDBOOK. The Office of Student Academic Affairs (DFR), Curriculum and Academic Affairs Division (DFRC), publishes the Curriculum Handbook at the beginning of each academic year. Together with the USAFA Catalog, published by the Office of Admissions (RR), it documents the curriculum of the United States Air Force Academy as approved by the Academy Board. The Curriculum Handbook contains general information concerning graduation requirements, academic registration procedures, course offerings, academic programs and majors, and academic probation. If you have questions, contact DFRC in Fairchild Hall, Room 2G13, (719) 333-2106.

1-2. HANDBOOK CONTENTS. This handbook is organized into three main topic areas. Chapters 1-6, General Information, contain information concerning academic registration procedures, grades, scheduling, academic deficiencies, and special programs. Chapters 7-10, Academic Programs, deal with the core courses, academic majors, and minors. Chapter 11 is a description of the Bachelor of Science Program. Chapters 12 and 13 contain course descriptions and definitions.

1-3. CURRICULUM CHANGE PROPOSALS. The Academy has established procedures for updating and revising the USAF Academy curriculum. These procedures are explained in detail in USAFA Instruction 36-3507, Curriculum Handbook and Curriculum Change Control.

1-4. OBJECTIVES OF THE ACADEMY CURRICULUM.

a. Officer Development System

(1) USAFA's Officer Development System (ODS) is founded on the idea that professional commitments can be fostered through deliberate connections to the principles of professional military service. ODS provides a holistic framework designed to coordinate and integrate cadet developmental activities across their entire four-year experience with emphasis on cadet ownership. Above all else, it focuses on character-based officership and prepares cadets for a career of continual professional development in service to the Air Force and the nation.

(2) The threefold purpose of ODS is to develop each cadet's appreciation that being an officer is a noble way of life, to foster a commitment to character-based officership, and to develop competencies essential to this identity as a character-based officer-leader.

(3) The academic, commissioning education, physical education, and character development programs work together to support USAFA's ODS goals.

b. Academic Program.

(1) Provides cadets with general courses in the basic sciences, engineering, social sciences, and humanities to form a Liberal Arts foundation for their development as future Air Force officers. The broad CORE curriculum at USAFA continues to hold true to the the belief of its founders, that national leaders require multidisciplinary perspectives and skills to solve its complex problems.

(2) Offers elective courses to meet cadets' needs and desires.

(3) Motivates cadets toward advanced education through enrichment courses (e.g., advanced placement, audit, special topics, and independent study).

(4) Prepares cadets to fulfill their intellectual responsibilities as citizens and dedicated public servants in the Air Force.

c. Commissioning Education.

(1) Further develops the moral character and leadership qualities desired of an Air Force officer.

(2) Further instills dedication to national defense and pride in the Air Force.

(3) Further prepares cadets to perform the duties of an officer, to pursue continued professional development through military education programs, and to demonstrate competence in those fields unique to military service, particularly the United States Air Force.

d. Physical Education and Athletics.

(1) Further develops desirable traits of character essential to leadership, including persistence, desire to win, aggressiveness, and esprit de corps.

(2) Teaches skills needed to perform physical tasks.

(3) Encourages a positive attitude toward physical fitness.

e. Character Development.

(1) Facilitates character development throughout all aspects of the Academy experience.

(2) Prepares graduate officers who:

(a) Have forthright integrity and voluntarily decide to do the right thing.

(b) Are selfless in service to the country, the Air Force, and their subordinates.

(c) Are committed to excellence in the performance of their personal and professional responsibilities.

(d) Respect the dignity of all human beings.

(e) Are decisive, even when facing high risk.

(f) Take full responsibility for their decisions.

(g) Have the self-discipline, stamina, and courage to do their duty well even under the extreme and prolonged conditions of national defense.

(h) Appreciate the significance of spiritual values and beliefs to their own character development and that of the community.

1-5. GRADUATION AND RESIDENCY REQUIREMENTS. To graduate from the USAF Academy, a cadet must demonstrate an aptitude for commissioned service and leadership, display acceptable conduct, maintain proficiency in physical education and the commissioning education program, and meet all requirements for an academic major unless approved for the Bachelor of Science Program.

a. To fulfill academic requirements, cadets must satisfactorily complete the core curriculum with a minimum 2.0 core grade point average (GPA). Cadets must also meet the minimum standard of a 2.00 cumulative GPA. All cadets must declare a major, unless approved for the Bachelor of Science Program, and earn a minimum 2.0 major's GPA in that major.

b. A cadet must have at least eight semesters in residence at USAFA. A semester spent in a USAFA-sponsored exchange program/semester abroad, not to exceed one, counts as a semester in residence. A cadet must take at least 131 semester hours at USAFA (including those completed in USAFA-sponsored exchange programs, not to exceed 24 semester hours) to satisfy residency requirements, regardless of semester hours transferred and validated. Courses which do not fulfill residency requirements include those validated or transferred, courses carrying no semester hour credit, pass/fail courses unless designated as an Academy Option, failed courses, and courses taught by Student Academic Services (Study Skills and Reading Skills).

c. A cadet's commissioning education includes a course of study in professional military education and the leadership laboratory experience provided by being part of the Cadet Wing. Each cadet is evaluated on military performance each semester and must maintain a minimum 2.0 cumulative military performance appraisal (MPA) level of performance for graduation. Before graduation, each cadet must successfully complete each of the Core Military Training programs as a student. Each Cadet must successfully complete leadership programs, one of which must be a Military Leadership program. Leadership credit can be obtained during the school year if key leadership positions within the Cadet Wing are held for the entire semester.

d. To fulfill the Physical Education requirements, cadets take 5.0 semester hours (ten 0.5 semester hour courses) of Phy Ed credit over their four academic years. Participation in intramurals, clubs, or intercollegiate athletics is required in each of their eight academic semesters. Proficiency is also required in both the physical fitness test (PFT) and aerobic fitness test (AFT). Athletic proficiency for graduation is demonstrated by meeting the minimum standard of a 2.00 cumulative physical education average (PEA). PEA is a weighted 4.00 grading scale (50% PFT + 35% Phy Ed courses + 15% AFT).

e. To fulfill character development requirements, cadets must satisfactorily complete the following four programs administered by the Center for Character & Leadership Development (CWC):

4° - Character & Leadership 101: Foundations of Honorable Living
(a) VECTOR: Vital Effective Character Through Observation and Reflection, or
(b) MOSAIC Personalized coaching experience
3° - Character & Leadership 201: R & R
(Respect and Responsibility)
2° - Character & Leadership 301: LIFT
(a) Leaders in Flight Today, or
(b) Personalized coaching experience
1° - Character & Leadership 401: ACES
(Academy Character Enrichment Seminar)

f. Transfer/validation credit. Cadets who attended another college or university or who validate courses may earn validation or transfer credit that is included in the total semester hour count. If cadets leave the Academy prior to Lesson 9 of their first semester, transfer/validation credit will not appear on their USAFA transcripts.

(1) A cadet who is readmitted following disenrollment or resignation may be given transfer or validation credit for courses taken while away from USAFA. If the transfer or validation credit is for a course previously taken and failed at USAFA and subsequently repeated at another college or university, the transfer/validation credit should fill the course requirement on the grad check and the 'F' grade will be listed under "Other Courses Taken" for active cadets; the 'F' grade continues to count in the cumulative GPA.
(2) Credit (grades and corresponding quality points) will be accepted for courses completed with a proficient grade at USAFA by USAFA Preparatory School cadets upon entering USAFA. If a Cadet Candidate from the USAFA Preparatory School is receiving a deficient grade, he/she will be withdrawn from the course.
(3) Phy Ed courses can be transferred from other universities, particularly for cadets on semester exchange to foreign military academies and sister service academies. Regardless of the total number of Phy Ed courses transferred, a minimum of eight USAFA Phy Ed courses must be taken and counted toward graduation requirements.

1-6. INTERNATIONAL CADETS. Students that are citizens of foreign countries are designated International Cadets. International Cadets for whom English is a second language are awarded validation credit for their native language. They must fulfill all other Academy

graduation requirements to earn a Bachelor of Science degree; those International Cadets who do not fulfill all requirements before graduation are awarded a certificate of completion stating they attended the USAF Academy for four years. For details, refer to Faculty Operating Instruction 36-164, Policies and Procedures for Cadets Who Speak English as a Second Language. International cadets are not authorized to participate in UAS-RPA Airmanship courses without 306 FTG/CC approval.

CHAPTER 2

REGISTRATION

2-1. RESPONSIBILITY FOR REGISTRATION.

a. Cadet Responsibilities. The primary responsibility for completion of graduation requirements rests with the cadet. Each cadet is expected to plan a course of study and maintain satisfactory standards of scholarship and conduct. The faculty stands ready to help when called upon, **but the initiative rests with the cadet**. **Cadets must meet with their academic advisors or Associate Air Officers Commanding for Academics (AAOCA) at least once each semester prior to the registration deadline for the following semester.** In addition, cadets will take the following steps:

(1) Deliver all annotated Academic Program Summaries (APSs) with course changes for the following semester to DFRC if after the registration deadline.

(2) Verify the accuracy of each document returned from the Office of Student Academic Affairs following the processing of course change requests.

(3) Ensure the latest copy of the APS reflects plans for meeting graduation requirements.

(4) See their AAOCAs to declare academic majors. Cadets must declare a major no later than a week prior to the registration deadline during their third semester (fall of third-class year). However, some majors, Computer Science, Chemistry, and Biology (particularly those interested in pursuing medical school) for example, should be declared before the end of the fourth-class year.

(5) Submit a USAFA Form O-498, Request for Permission to Enroll in an Independent Study Course, when necessary (see Para 2-10).

(6) Comply with all registration changes, academic major declarations, and academic major change procedures and deadlines described in this handbook.

b. Advisor-in-Charge (AIC), Academic Advisor, and AAOCA responsibilities.

(1) Fill out or review the advising worksheet at initial meeting with each advisee at the beginning of each fall semester.

(2) Hold cadets accountable for meeting deadlines established in this handbook. To ensure accomplishment of all necessary administrative requirements, advisors and AAOCAs must meet with their advisees at least once each semester prior to the registration deadline for the following semester.

(3) Be available for cadet appointments concerning registration changes, academic

program declarations, and academic program changes.

(4) Coordinate all advisee registration changes, academic program declarations, and academic program changes by completing the online Q2 registration process.

(5) Verify each advisee's program meets course prerequisite requirements and that waivers and department approvals have been obtained as required.

(6) Be responsible for accomplishing counseling, registration changes, or academic program changes with advisees directed by the Academic Review Committee (ARC).

(7) Initiate, at the beginning of the semester, an annotated APS to drop all overload courses for cadets who do not meet minimum GPA criteria for overloads.

(8) Make sure each advisee's academic program includes all requirements for graduation.

(9) Ensure cadets on academic probation are counseled at each progress report.

(10) Assist and counsel advisees preparing for ARC interviews.

(11) Provide mentoring and guidance towards achievement of the cadets' personal and professional goals.

2-2. ACADEMIC COUNSELING AND ADVISING. The Dean of the Faculty has given DFR responsibility for administering the academic advising and counseling program. DFRC trains and educates the AAOCAs and AICs for each academic program the Academy offers. Academic advising is an integral part of the Academy learning experience. Academic advising includes assisting cadets with course and program selection and registration, helping cadets develop realistic self-perceptions, and successfully transitioning cadets to the Academy environment.

a. AAOCA. Each AAOCA provides general advice and counsel on academic programs to cadets of his/her squadron. AAOCAs mentor cadets in selecting an academic program that mirrors the cadets' life goals and is supported by the cadets' abilities. AAOCAs keep records on all advisees. A more detailed listing of the functions and responsibilities of AAOCAs is contained in the Mentoring and Advising Handbook.

b. Advisor-in-Charge (AIC). Each AIC is responsible for the advising of all cadets within the applicable academic program. The AIC may have a number of assistants (advisors) to help counsel cadets interested in that discipline; however, it is the AIC that makes all final decisions in administering the program. The AIC, in general, oversees the proper completion and timely submission of all inputs to the registration system. In this regard, the AIC serves as the single point of control for all paperwork and procedures concerning the program; DFRC will honor only the AIC's signature or that of a designated alternate.

APS / Academic Program Summary — **DFRI - Q2i System** — **Snapshot Date: 31 Aug 2009 22:17**

Personal Data - Privacy Act of 1974

Gender: **Class Year:** **Squadron:** **Aca Comp:** **Prep:** **Advisor:**

Cum GPA: 3.78 **Core GPA:** 3.72 **OPA:** 3.508 **1st Major GPA:** 3.89

Summer 2006

MilTng	100	0.00	P
PhyEd	100	0.00	P
		0.00	

Fall 2006

Chem	141	3.00	A	A
CompSci	110	3.00	A	A
English	111	3.00	A-	A
Engr	100	3.00	A-	A
Math	152	3.00	A	A
PDP	100	0.00		
PhyEd	110A	0.50		B-
		15.50		

GPA		MPA		PEA	
3.96	3.96	3.220	3.220	2.47	2.47

Honors: **Dean's and Comm's**

Spring 2007

BehSci	110S	3.00	A-	A
Chem	142	3.00	A	A
EngrMech	120	3.00	A	A
ExtProg	917	0.00		
History	101S	3.00	B+	B+
Math	243	3.00	B	A
PDP	101	0.00		
PhyEd	112H	0.50		A
Physics	110	3.00	A	A
ReadSkls	103	2.00		P
		20.50		

GPA		MPA		PEA	
3.89	3.92	3.160	3.190	2.85	2.66

Honors: **Dean's and Comm's**

Summer 2007

MilTng	101AC	0.00	P
MilTng	444DF	0.00	P
MilTng	260GH	0.00	P
Armnshp	251HI	0.00	WP
		0.00	

GPA
3.92

Fall 2007

AeroEngr	315	3.00	B	B+
Econ	200S	2.00	A	A
ExtProg	927	0.00		
History	202S	3.00	A	A
Math	245	3.00	B	A-
Mgt	200	2.00	B-	B
MSS	100	3.00	A-	A-
PDP	200	0.00		
PhyEd	111D	0.50		C+
Physics	215	3.00	A	A-
		19.50		

GPA		MPA		PEA	
3.61	3.81	3.480	3.287	2.36	2.56

Honors: **Dean's and Comm's**

Spring 2008

AeroEngr	241	3.00	B+	A-
Armnshp	461	3.00		P
ElEngr	231	3.00	A	A
English	211S	3.00	A	A-
Engr	210	3.00	B	A-
ExtProg	927	0.00		
Math	346	3.00	A	A
PDP	201	0.00		
PhyEd	222E	0.50		A-
PhyEd	342G	0.50		B
SocSci	112	3.00	B+	B
		22.00		

GPA		MPA		PEA	
3.67	3.77	3.100	3.240	2.47	2.56

Honors: **Dean's and Comm's**

Summer 2008

Armnshp	472AC	0.00	P
MilTng	201DF	0.00	P
MilTng	444GI	0.00	
		0.00	

GPA	MPA	
3.77	3.600	3.265

Fall 2008

AeroEngr	341	3.00	A	A
AeroEngr	351	3.00	A	A
Armnshp	475	0.00		P
BehSci	310	3.00	C+	A-
Biology	215	3.00	A-	B+
EngrMech	320	3.00	B	A-
ExtProg	927	0.00		
PDP	300	0.00		
PhyEd	215D	0.50		B-
PolSci	311S	3.00	B	A-
		18.50		

GPA		MPA		PEA	
3.71	3.76	3.353	3.281	2.50	2.55

Honors: **Dean's and Comm's**

Spring 2009

AeroEngr	342	3.00	A	A
AeroEngr	352	3.00	A	A
AeroEngr	361	3.00	A	A
AeroEngr	471	3.00	A	A
Armnshp	475	0.00		P
ExtProg	927	0.00		
Law	220S	3.00	A-	B+
Math	356	3.00	B	A
PDP	301	0.00		
		18.00		

GPA		MPA		PEA
3.88	3.78	3.040	3.243	2.55

Honors: **Dean's and Comm's**

Summer 2009

MilTng	442AC	0.00	P
Armnshp	475DF	0.00	P
Armnshp	475GI	0.00	P
		0.00	

GPA
3.78

Fall 2009

AeroEngr	442 3.00
AeroEngr	457 3.00
AeroEngr	481 3.00
EngrMech	330 3.00
ExtProg	927 0.00
Hum	400S 3.00
PDP	400 0.00
PhyEd	340D 0.50
SocSci	495S 3.00
	18.50

MPA	PEA
3.243	2.55

Spring 2010

AeroEngr	482	3.00	
Armnshp	490F	0.00	P
Armnshp	420X	0.00	P
AstroEngr	310	3.00	
EngrMech	332	3.00	
MSS	400S	3.00	
PDP	401	0.00	
Philos	310	3.00	
PhyEd	315E	0.50	
PhyEd	487G	0.50	
PhyEd	484H	0.50	
		16.50	

Major(s)	Minor(s)
AeroEngr	No Minor

Validation Credit

Math 141

Athletic Squads

ITNC Fall

ITNC Spring

Fitness Tests		Test	Score
Fall 2009	1	AFT	
		PFT	

Military Position

SQ-ST-EV-OF Fall

Medical Status

Entry Other Grad

AFSC 92T0

PILOT TRAINEE

Cadet: _____

Advisor: _____

AIC: _____

Personal Data - Privacy Act of 1974

Figure 2-1

Figure 2-2

APS / Grad Check

Personal Data - Privacy Act of 1974

DFRI - Q2i System Snapshot Date: 31 Aug 2009 22:17

Grad Check As Of: 8/20/2009 8:34:40 AM

Gender: **Class Year:** **Squadron:** **Aca Comp:** **Prep:** **Advisor:**

Cum GPA: 3.78 **Core GPA:** 3.72 **OPA:** 3.508 **1st Major GPA:** 3.89

Core

Requirement	Course		GPA		Wvr	Sem	Grd	Hrs
C01AB - AeroEngr 315	AeroEngr	315	C	M1		07B	B+	3.0
C02BA - Energy/Systems	AeroEngr	241	C	M1		07C	A-	3.0
C03AC - Astro 310	AstroEngr	310	C			09C	*	3.0
C04AB - Chem Core	Chem	141	C			06B	A	3.0
C04AB - Chem Core	Chem	142	C			06C	A	3.0
C05AB - Comp Sci 110	CompSci	110	C			06B	A	3.0
C06AC - Econ 200	Econ	200	C			07B	A	2.0
C07AB - Engr 100/101	Engr	100	C	M1		06B	A	3.0
C08AF - Engr 210	Engr	210	C			07C	A-	3.0
C09AA - ECE 215/231	ElEngr	231	C	M1		07C	A	3.0
C10AC - English 111	English	111	C			06B	A	3.0
C11BA - English 211	English	211	C			07C	A-	3.0
C12AA - English 411	*****	***				*	*	0.0
C15AB - Beh Sci 310	BehSci	310	C			08B	A-	3.0
C16AA - History 101	History	101	C			06C	B+	3.0
C17AA - History 202	History	202	C			07B	A	3.0
C20AB - Law 220	Law	220	C			08C	B+	3.0
C21AB - Biology 215	Biology	215	C			08B	B+	3.0
C22AB - Math 141	Math	141				06A	V	3.0
C23AB - Math 142/152	Math	152	C			06B	A	3.0
C26BA - Math 300	Math	356	C	M1		08C	A	3.0
C28AC - Physics 110	Physics	110	C			06C	A	3.0
C29AB - EngrMech 120	EngrMech	120	C			06C	A	3.0
C30AA - Philos 310	Philos	310	C			09C	*	3.0
C31AB - Physics 215	Physics	215	C			07B	A-	3.0
C33AB - Pol Sci 211/311	PolSci	311	C			08B	A-	3.0
C34AC - Soc Sci 112	SocSci	112	C			07C	B	3.0
C37AB - Beh Sci 110	BehSci	110	C			06C	A	3.0
C40BA - Mgt 200	Mgt	200	C			07B	B	2.0
C54BC - MSS 100	MSS	100	C			07B	A-	3.0
C58BB - MSS 400	MSS	400	C			09C	*	3.0
C91AA - Combative	PhyEd	110	C			06B	B-	0.5
C91AB - Physical Devel	PhyEd	112	C			06C	A	0.5
C92AA - Swimming	PhyEd	111	C			07B	C+	0.5
C92AB - Water Survival	PhyEd	222	C			07C	A-	0.5
C92AC - Indiv Sport Opt	PhyEd	340	C			09B	*	0.5
C93AA - Unarmed Combat1	PhyEd	215	C			08B	B-	0.5
C93AB - Unarmed Combat2	PhyEd	315	C			09C	*	0.5
C93AC - Team Sport Opt	PhyEd	484	C			09C	*	0.5
C94AA - Open Elective	PhyEd	342	C			07C	B	0.5
C94AB - Open Elective	PhyEd	487	C			09C	*	0.5

Major: 1st (AeroEngr)

Requirement	Course		GPA		Wvr	Sem	Grd	Hrs
M31AC - Math 243	Math	243	M1			06C	A	3.0
M31BB - Math 245	Math	245	M1			07B	A-	3.0
M31CB - Math 346	Math	346	M1			07C	A	3.0
M31DB - EngrMech 320	EngrMech	320	M1			08B	A-	3.0
M31EB - EngrMech 330	EngrMech	330	M1			09B	*	3.0
M31FB - Structures/Mat	EngrMech	332	M1			09C	*	3.0
M31GB - AeroEngr 341	AeroEngr	341	M1			08B	A	3.0
M31HB - AeroEngr 342	AeroEngr	342	M1			08C	A	3.0
M31IB - AeroEngr 351	AeroEngr	351	M1			08B	A	3.0
M31JA - AeroEngr 352	AeroEngr	352	M1			08C	A	3.0
M31KB - AeroEngr 361	AeroEngr	361	M1			08C	A	3.0
M31MB - AeroEngr 442	AeroEngr	442	M1			09B	*	3.0
M31NB - AeroEngr 471	AeroEngr	471	M1			08C	A	3.0
M31OA - AeroEngr 481	AeroEngr	481	M1			09B	*	3.0
M31PA - Design Elect	AeroEngr	482	M1			09C	*	3.0
M31QA - AeroEngr Elect	AeroEngr	457	M1			09B	*	3.0
M31RA - Academy Option	Armnshp	461				07C	P	3.0

Other Courses Taken

Course		GPA		Wvr	Sem	Grd	Hrs
Armnshp	251				07A	WP	0.0
Armnshp	420				09C	P	0.0
Armnshp	472				08A	P	0.0
Armnshp	475				08B	P	0.0
Armnshp	475				09A	P	0.0
Armnshp	475				09A	P	0.0
Armnshp	475				08C	P	0.0
Armnshp	490				09C	P	0.0
Hum	400				09B	*	3.0
MilTng	100				06A	P	0.0
MilTng	101				07A	P	0.0
MilTng	201				08A	P	0.0
MilTng	260				07A	P	0.0
MilTng	442				09A	P	0.0
PDP	100				06B		0.0
PDP	101				06C		0.0
PDP	200				07B		0.0
PDP	201				07C		0.0
PDP	300				08B		0.0
PDP	301				08C		0.0
PDP	400				09B		0.0
PDP	401				09C		0.0
PhyEd	100				06A	P	0.0
ReadSkls	103				06C	P	2.0
SocSci	495				09B	*	3.0

Scholar's Courses

BehSci	110	Spring 2007	A
Econ	200	Fall 2007	A
English	211	Spring 2008	A-
History	101	Spring 2007	B+
History	202	Fall 2007	A
Hum	400	Fall 2009	
Law	220	Spring 2009	B+
MSS	400	Spring 2010	
PolSci	311	Fall 2008	A-
SocSci	495	Fall 2009	

Resident Semester Hours - 147 Resident Semester Hours Required for Graduation - 132 Total Semester Hours - 152

--- = Missing Requirement * = Midterm Grade Wvr: Y = Waiver Granted GPA: C = Core; M1 = 1st Major; M2 = 2nd Major Sem: YY=Academic Year; A=Summer; B=Fall; C=Spring

Personal Data - Privacy Act of 1974

c. Maintenance of Cadet Academic Records. The AIC, advisor, or AAOCA keeps a current copy of cadets' APSs and other academic-related documents to include waivers, graduation checks, Cadet Academic Deficiency Evaluation and Probation Action Plans (USAFA Form 68, Figures 5-1a and b) and special information concerning cadets' academic programs. Cadets should keep copies of all information related to their academic programs. Cadets' official transcripts may be requested from DFRR. The most current APSs are available from the CAMIS II Cadet Schedules application or from Q2. Records should be maintained for six months following the cadet's graduation or departure. Advising folders can be purged and returned to DFR for reuse at that time.

2-3. PROGRAM PLANNING. During their first semester at the Academy, fourth-class cadets should begin planning their academic program. As an aid to cadets and their AAOCAs, DFRR will pre-register each cadet in all core courses the cadet must complete at the Academy based upon predetermined semester-load balances negotiated with academic departments. Cadets and AAOCAs must check APSs for omissions, sequencing errors, and ensure third semesters include prerequisites required by the envisioned academic major. Cadets may make changes to this initial schedule, provided they satisfy core sequencing policies.

a. Course Offerings. Course offerings are published annually in the *USAF Academy Catalog*, semi-annually in the Curriculum Handbook Supplement, and annually in this handbook.

b. Contact Hours. The two-day USAF Academy scheduling cycle limits the available number of periods (contact hours) to 14. Because some academic courses meet every day or require a double period for laboratory or seminar meetings, cadets should be careful to keep their programs within the 14-period limit each semester. Cadets should pay particular attention to flying programs that require additional periods. The number of contact hours for each course is shown in the course description section of this handbook beside the course identifier. For example, an entry "3(2)" indicates that a course has three-semester hours value and meets two contact hours over the two-day scheduling cycle.

c. Course Preparation. Academic study loads are based upon the Carnegie Unit and accreditation requirements. The expectation is that cadets prepare approximately 106 minutes outside of class for every 53 minutes in class. This translates to an expectation of 6-10 hours of study each weekend, full use of free periods, and focused study during Academic Call to Quarters (ACQ).

d. Course Load. When planning course loads, cadets should attempt to balance their schedules as much as possible. The minimum course load for all cadets is five academic courses (must be a minimum of 15.5 semester hours). The exception to this is for cadets in wing leadership positions (see para 2-3d(4)).

(1) The minimum course load for fourth-class cadets in the fall semester is five academic courses (must be a minimum of 15.5 semester hours); fourth-class cadets cannot overload to six courses in the fall. Cadets determined to be Academically At-Risk will only take 4 academic courses their first semester and Study Skills 101 (see para 6-5); the course loads

for their first two semesters are determined upon entry into the Academy and cannot be changed.

(2) At-risk fourth-class cadets will be enrolled in five academic courses (must be a minimum of 15.5 semester hours) during the spring semester of the fourth-class year. In addition, these cadets will normally be granted an academic-plus-leave slot in the summer prior to their third-class year. The normal course load for all other fourth-class cadets in the spring semester is six academic courses. Fourth-class cadets cannot overload to seven courses.

(3) Third-class, second-class, and first-class cadets must take a minimum of five courses and a maximum of 7 academic courses, or 15.5 - 22 semester hours per semester. Cadets who are in good standing may exceed 22 semester hours if they have a minimum 3.25 cumulative or previous semester GPA. Waiver authority is DFR.

(4) The minimum course load for the Wing Commander, Vice Wing Commander, the four Group Commanders, the Wing Honor Chair, the Deputy Wing Honor Chair, and the eight Group Honor Chairs is 12.5 semester hours.

(5) Any cadet placed on academic probation may be ARC-directed to drop a course or courses.

e. Normal Course Load Progression for Graduation:

CLASS	**SEMESTER**	**SEMESTER HOURS**	
		Divisional	*Disciplinary*
Fourth	1	**15.5**	**15.5**
	2	**18.5**	**18.5**
Third	3	**18.5**	**19**
	4	**19**	**18.5**
Second	5	**18.5**	**19**
	6	**19**	**18.5**
First	7	**15.5**	**18.5**
	8	**15.5**	**18.5**
Total Semester Hours:		**140**	**146-147**

2-4. CADET ADMINISTRATIVE MANAGEMENT INFORMATION SYSTEM (CAMIS). CAMIS II is the computer database USAFA personnel use to record cadets' academic programs. Office of Student Academic Affairs staff produces and distributes CAMIS II products that cadets and advisors use for registration and monitoring progress toward graduation. Q2 is an administrative tool used to simplify numerous academic administrative functions. If Q2 and CAMIS II products conflict, CAMIS II products take precedence. Samples of the Q2 APS and the Academic Graduation Check are provided in Figures 2-1 and 2-2.

a. Academic Program Summary. Information found on the APS (Figure 2-1) includes transfer and validation credit, athletic squads, clubs, intramurals, total semester hours for each semester, total cumulative semester hours at the end of each semester, semester and cumulative GPA at the end of each semester, turn back status, academic probation information, and courses taken and planned. The following areas warrant further explanation:

(1) "Academic Probation" indicates academic probation for mid-semester (Prog), end-of-semester (End), or end-of-summer term (End) and is a permanent entry for that semester or term.

(2) The semester hour total listed below each semester's courses reflects all completed graded courses, completed pass/fail courses, and transfer and validation semester hours' credit.

(3) Activity Codes: Following are the activity codes which appear on the APS. The prefix "V" indicates varsity. "J" indicates junior varsity. "I" indicates intramurals. "O" or "C" designates clubs. The suffix "M" indicates male, "F" indicates female and "C" indicates coed. The middle two letters indicate the activities listed in Figure 2-3.

b. Academic Graduation Check. The three major sections of the grad check (Figure 2-2) are Core Requirements, Major Requirements, and Other Courses Taken. Columns represent the following:

(1) The "Requirement" column lists the Master Course File number and the course title.
(2) The "Course" column lists the course filling the requirement.
(3) The "GPA" column lists each GPA toward which that course counts.
(4) The "Wvr" column indicates if that course was waived (Y) into that requirement.
(5) The "Sem" column lists the semester in which the course was taken or is planned.
(6) The "Grd" column lists the final grade, the mid-term grade, or no grade for a course not yet taken (*) or scheduled (--). A 'T' indicates transfer credit. A 'V' indicates validation credit.
(7) The "Hrs" column lists the semester hours for the course filling that requirement.

c. Verification of Graduation Requirements.

(1) Academic Requirements: During the fall semester, DFRC audits the core curriculum portion of each first-class cadet's graduation check to ensure all core requirements have been or will be met. Coordinate with DFRC if you make any changes to the cadet's program subsequent to this certification to ensure the graduation check remains valid.

(2) Verification of Military Graduation Requirements: Each fall semester, Commandant of Cadets personnel will audit and verify the military training curriculum portion of cadets' graduation check to ensure all military training requirements have been or will be met. Advisors cannot make changes to a cadet's summer military training program.

(3) Verification of Athletic Graduation Requirements: Each semester, ADP will audit and verify the physical education curriculum portion of each cadet's graduation check to ensure their physical education course requirements and their Physical Education Average (PEA) status fulfills graduation requirements.

d. Semester Titles. Semester and term titles on the APS and grad check are as follows:

SEMESTER TITLES

Semester/Term	*APS Title*	*AGC Title*
Summer Term 2012	Summer 2012	12A
Fall Semester 2012	Fall 2012	12B
Spring Semester 2013	Spring 2013	12C
Summer Term 2013	Summer 2013	13A

2-5. REGISTRATION PERIODS. Four types of registration periods occur:

a. Special Semester Registration: Changes authorized anytime. Coordination by all affected departments is required. Changes authorized:

(1) Drop courses per course drop timetable (para 2-7d)

(2) First-class only: correct grad check discrepancies (department coordination required)

(3) Department-approved changes to lower/higher-level courses

(4) Academic Review Committee-directed changes

(5) Change of advisor and/or major

b. Late Registration: Registration changes for the next semester requested after that semester's registration deadline (e.g., changes to spring requested in December). Obtain approval to add or drop classes from each affected department head in the form of a signature on the APS.

c. Future Semester On-Line Registration: Registration changes for future fall and spring semesters are accepted anytime in Q2 by the cadet's assigned advisor. If past the registration deadline for that semester, late registration procedures apply (see para 2-5b). Department coordination is required during on-line registration for future semesters if the change violates course prereqs (para 7-4) or the course requires department approval as directed by the course description (Chapter 12).

d. Summer Registration: Summer registration occurs in the spring semester preceding the summer term. Details will be advertised by DFRC to cadets and advisors.

2-6. CHANGES AFFECTING FUTURE SEMESTERS (Q2i "On-Line" Registration). Schedule changes to future semesters can be made any time before the registration deadline for that semester as advertised by DFRC. The registration deadline for the spring semester occurs in the October preceding it. The registration deadline for the fall semester occurs in the March preceding it. Advisors/AAOCAs can enter registration changes for future semesters through Q2i's On-Line Registration System. Moving a core course outside its designated year requires an academic waiver approved by the Associate Dean for Student Academic Affairs (DFR).

a. Q2i On-Line Registration - Options:

(1) Add Course (add course to future semester)

(2) Move Course (move future course to a different semester)

(3) Change Course (change semesters for two future courses)

(4) Replace Course (replace future course with a new course)

(5) Delete Course (delete course from future semester)

b. Q2i On-Line Registration – Rules of Engagement:

(1) Only academic courses can be changed with Q2i (i.e. no Phy Ed and no Armnshp, except Armnshp 490).

(2) Advisors can only change advisees' courses.

(3) AICs (Advisor In-Charge) can make changes to cadets within their major.

(4) Schedules for the current semester must be changed by DFRC after coordination with affected departments per registration guidance. After the registration deadline for the upcoming semester, advisors will not be able to make on-line changes for that semester.

(5) AICs must check and approve pending changes (manually check course prereqs).

(6) Advisors verify changes were made (view new APS next day).

(7) Only offered courses can be added in associated semesters.

(8) Q2i should, but won't always, generate warnings for underloads and overloads.

Figure 2-3
Activity Codes

Competitive
BY C BICYCLE CLUB
FO C FORENSICS
FP F FASTPITCH SOFTBALL
HB M HANDBALL
JU C JUDO
LX F LACROSSE
PI C PISTOL
RB F RUGBY
RB M RUGBY
SB F SOFTBALL
SN C SKIING
VB M VOLLEYBALL

Intramural
AE C AEROBICS
BB C BASKETBALL
BO C BOWLING
BX M BOXING
CC C CROSS COUNTRY
FE C FOREIGN EXCHANGE
FF C FLAG FOOTBALL
FK C FLICKER BALL
MC C MOUNTAIN CYCLING
OT C OTHER
RB F RUGBY
RB M RUGBY
RC C RECONDITION
RQ C RACQUETBALL
SB C SOFTBALL
SO C SOCCER
TH C TEAM HANDBALL
TN C TENNIS
UF C ULTIMATE FRISBEE
VB C VOLLEYBALL
WA C WALLYBALL
WD C WING DUTY
WP C WATER POLO
WT C WEIGHT TRAINING

Junior Varsity
BA M BASEBALL
BB F BASKETBALL
BB M BASKETBALL
CC F CROSS COUNTRY
CC M CROSS COUNTRY
CL F CHEER LEADER
CL M CHEER LEADER
FB M FOOTBALL
FN F FENCING
FN M FENCING
GO M GOLF
IH M ICE HOCKEY
LX M LACROSSE
RI F RIFLE
RI M RIFLE
SO F SOCCER
SO M SOCCER
SW F SWIMMING
SW M SWIMMING
TN F TENNIS
TN M TENNIS
TR F TRACK
TR M TRACK
VB F VOLLEYBALL
WR M WRESTLING

Mission Support
AA C ARNOLD AIR SOCIETY
CH C CHORALE
DB C DRUM & BUGLE
FA C FALCON HANDLER
FO C FORENSICS
FV C EMER MED TECHS
FY C FLYING TEAM
HG C HONOR GUARD
LS C FIRST RESPONDERS
MA C MEDIA
PP C POLARIS
PT C SANDHURST TEAM
SD C SABRE DRILL TEAM
SG C SOARING

Recreational
AK C AIKIDO REC CLUB
AR C ARCHERY
BS C BIG BROTHERS/SISTERS
EC C PRIOR ENLIST. COUNCIL
EQ C EQUESTRIAN
FL C FITNESS/POWERLIFTING
HU C HUNTING
IS C ICE SKATING
JU C JUDO
KA C KARATE
KR C KARATE/TECHNICAL
KT C KARATE/TEAM
LP C LOS PADRINOS
ME C MODEL ENGINEERING
MT C MOUNTAINEERING
NJ C NINJITSU
PD C PAINTBALL
PR C PACIFIC RIM
RD C RODEO
RG C ROWING
SA C SCUBA
SN C SKIING
SQ C SQUASH
TS C TRAP/SKEET
WG C WARGAMING
WL C WAY OF LIFE

Varsity
BA M BASEBALL
BB F BASKETBALL
BB M BASKETBALL
BS M BOXING
CC F CROSS COUNTRY
CC M CROSS COUNTRY
CL F CHEER LEADER
CL M CHEER LEADER
DV F DIVING
DV M DIVING
FB M FOOTBALL
FN F FENCING
FN M FENCING
GO M GOLF
GY F GYMNASTICS
GY M GYMNASTICS
IH M ICE HOCKEY
LX M LACROSSE
RI F RIFLE
RI M RIFLE
SO F SOCCER
SO M SOCCER
SW F SWIMMING
SW M SWIMMING
TN F TENNIS
TN M TENNIS
TR F TRACK
TR M TRACK
VB F VOLLEYBALL
WP M WATER POLO
WR M WRESTLING

(9) Advisors should ensure courses can schedule (14 hours contact time maximum).

(10) Advisors should ensure cadets meet all graduation requirements (core and major).

c. Registration changes after the registration deadline must be IAW paragraph 2-5b.

2-7. CHANGES AFFECTING CURRENT SEMESTER. We classify any changes affecting the present semester as current semester changes. Cadets must attend the courses printed on their academic schedules until they receive a new schedule via the CAMIS webpage. Instructors are required to mark absent any cadet who does not attend class, and is still on their roster. The cadet will drop off the instructor roster at the effective time that their schedules are changed. An instructor may allow a cadet to attend class (cadet is attempting to add) during the cadet's free period until he/she receives the schedule change.

a. Checklist for Changes to Current Semester. (all changes attempted after the normal registration period requires appropriate department head coordination; course drops must meet the deadlines listed in the course drop timeline).

(1) Cadet and advisor/AAOCA work out desired changes, checking:

(a) Course offering check (are courses taught in semesters desired?)

(b) Core courses sequencing check

(c) Academic program courses check (are all required courses scheduled?)

(d) Prerequisite check

(e) Underload/overload check

(f) Contact hour check (are 14 or less contact hours scheduled per semester?)

(g) Duplicate course check (are any courses scheduled more than once?)

(2) Cadet and advisor/AAOCA annotate a current APS with desired changes.

(3) For current semester changes, the APS must be coordinated by the following:

(a) Cadet, advisor/AAOCA, and AIC (if the cadet has declared an academic major)

(b) Department Head for each course that is added or dropped

(c) Coordination with the following agencies, if affected by changes:

Course	*Required Coordination*	*Phone #*
Soaring Armnshp Courses	306 OSS/OSTS	3-9326
Parachuting Armnshp Courses	306 OSS/OSTP	3-9321
Powered Flight Program	306 OSS/OST	3-5887
UAS/RPA Armnshp Courses	DFE	3-8225
Physical Education	ADP	3-3525

b. Directed Changes.

(1) DFRR may change a cadet's schedule to correct errors or to balance course load.

(2) DFRC may make changes to implement decisions resulting from the Academic Review Committee process. If any of these changes requires a cadet to drop or add a course, DFRC will sign the annotated APS as the initiating authority or may ask the advisor/AAOCA to sign the change request as the initiating authority.

(3) Cadets will drop necessary courses or initiate a waiver during Lesson 1 to comply with the overload policy for cadets whose grade point averages at the beginning of a semester are insufficient to carry their desired enrollment (see overload policy, para 2-3d and Definition of Terms).

c. Adding a Course. To add a course after Lesson 1 of the current semester, the cadet and Advisor/AAOCA must coordinate with DFRC and submit an APS signed by the Department Head of the class being added. After Lesson 3, no courses can be added without Department Head coordination and Vice Dean approval, coordinated through DFR.

d. Dropping a Course. A cadet may drop an academic program, elective, or core course during the semester with DFRC approval if not dropping below five academic courses and 15.5 semester hours. Cadets wishing to drop Armnshp 251, 461, 472, 473, 490, 491, 496, 420, and 465 must coordinate with the 306 FTG Registrar (3-9328) as well as the appropriate OSS Armnshp course manager (Soaring, Parachuting, or Powered Flight) identified above. Approval to drop a course is subject to the timeline shown in Figure 2-4 and dependent upon ability to retake the course within proper sequencing guidelines.

2-8. CHANGING AN ACADEMIC PROGRAM SUMMARY. Make changes to a cadet's program either in Q2 or by annotating required changes in RED INK on a current copy of the cadet's APS.

a. Ensure you use the most current APS available.

b. To drop courses, circle them (don't line out courses; this indicates no change to DFR personnel). If the course is circled in error, line through the circle and the class will not be dropped.

c. To add courses, write them in under the appropriate semester.

d. To change advisors, include new advisor's Social Security Account Number (SSAN).

e. To declare or change an academic program, annotate above the advisor's name.

f. Changes made to the 7th or 8th semester of a first-class cadet must include the graduation check to allow DFRC to verify graduation requirement will be met.

Figure 2-4
COURSE DROP TIMELINE

LESSON	ACTION
M1 - T8	Course will not appear in mid-semester progress report or on official transcript. Cadets must have AAOCA/Advisor and AIC (if applicable) coordination for their intended drops along with approval by all affected department heads. (Coordination will be via signature on current APS submitted for change; approval authority is DFR.)
M9 - T20	Drops which are in the best interest of USAFA and the cadet will be allowed in select circumstances. Cadets must have Advisor, AIC, and Course Director coordination with final approval by the major's Department Head. Undeclared cadets require AAOCA and Course Director coordination with approval by DFR. Coordination will be via USAFA Form 69 (see Figure 2-5), submitted to DFR. If drop is approved, a "W" will appear on the official transcript.
M21-T30	A grade will appear on the mid-semester progress report. Cadets academically deficient as a result of this grade will be placed on academic probation and will not be eligible to come off until the end of the semester. Drop requests must be submitted via an APS coordinated through the Course Director, AIC and AAOCA/Advisor. If drop is approved, a "WP" or "WF" will appear on the official transcript. DFR is the final approval authority.
M31-Finals	No drops will be allowed except in extraordinary circumstances (extended hospitalization, extended emergency leave, or extenuating occurrences approved by DFV). Extraordinary circumstances do not include cadet's academically deficient performance in a course and do not apply to cadets changing their academic programs, even if the course they wish to drop is not required in the cadet's new program. These drops will not be approved solely to remove a deficient grade in the course and must have waiver approval via USAFA Form 69 (see Figure 2-5) approved by DFV. Drops approved in this time period will be reflected on official transcripts as "WP" or "WF."

NOTES:
1. The cadet hand-carries completed APS and any required waivers to DFRC. The academic advisor or AAOCA keeps one copy of the annotated APS.

2. If the requested change does not create a graduation check failure, the requesting cadet receives a new schedule via the CAMIS webpage. If the change creates a graduation check failure or if other errors are detected, DFRC sends the annotated APS to the cadet's advisor for

review. Cadets must attend all courses until receipt of a new schedule via the CAMIS webpage.

2-9. WAIVERS. Use USAFA Form 69, Request for Academic Waiver (see Figure 2-5).

a. When cadets request substitute courses for core or academic program requirements, their advisors must list the specific line numbers of the requirements as listed in the Graduation Requirements Master File (found on cadets' Grad Checks or in the *Master Course File*). Advisors must also list the term (e.g., 12A is Summer 2012, 12B is Fall 2012; 12C is Spring 2013) in which the substitutes will be taken.

b. When a cadet requests a change to the approved core sequencing found in Chapter 7, the cadet must obtain the signature of the department head of the course delayed.

c. An APS and Grad Check must be submitted with the USAFA Form 69.

d. The advisor completes the appropriate portions of the form and signs it. The AIC initials approval of the form and submits it to the appropriate department head for signature. The form is taken to DFRC, who ensures the form has been completed correctly and processes the form through the final approval authority. DFRC returns disapproved waivers to advisors.

e. Final approval authorities for most waivers are as follows:

FINAL WAIVER APPROVAL AUTHORITY

TYPE OF WAIVER	WAIVER APPROVAL AUTHORITY
Core courses	
▪ Substitute	Academy Board
▪ Final exam or final report	Vice Dean
▪ Prerequisites	Appropriate Department Head
▪ Delay of core course	Appropriate Department Head
▪ Waiver of foreign language requirement	DFF Department Head
Non-core courses	
▪ Prerequisite	Appropriate Department Head
▪ Final exam or final report	Vice Dean
Academic Load	
▪ Minimum course load	Academy Board
▪ ARC-directed load	Academic Review Committee
▪ 7 courses while on academic probation	Academic Review Committee
▪ Course drop timeline (Figure 2-4)	DFR, DFV and DF
Substitutes for major's requirements	Appropriate Department Head
Minimum graduation requirements	Academy Board

2-10. INDEPENDENT STUDY COURSES. Cadets can be enrolled in independent study courses for future semesters on-line through Q2. A USAFA Form O-498, Request Permission to Enroll in an Independent Study Course (Figure 2-7), should be submitted to DFRR by lesson 1 of the semester with the independent study. Fourth- and third-class cadets will not be allowed to

enroll in an independent study course. 499 is a 3 semester hour course; 499A is a 2 semester hour course; 499B is a 1.5-semester hour course; 499C is a 1.0-semester hour course.

a. Title of Independent Study Courses. The title of an independent study course, submitted on the USAFA Form O-498, should be short and succinct. Limit the title to 30 characters, since the title or its abbreviation will appear on the cadet's official transcript. Except in special circumstances, which the requestor should explain, the title should be different from any assigned to other cadets. No cadet may take an independent study course during the summer term without permission of the Vice Dean of the Faculty, coordinated through DFR.

b. Limit of Independent Study Courses Taken. You may apply up to six semester hours of independent study to academic graduation requirements without department head approval. A cadet may take only three semester hours of independent study in any semester.

2-11. SPECIAL TOPICS COURSES. Special Topics Courses (495s) must be identified at least one semester in advance to DFR. Notification should include a course description, section size, enrollment restrictions, prerequisites/corequisites, and a list of students to enroll if already selected. Unless otherwise approved by the Curriculum Committee, special topics courses are worth three semester hours and require one contact hour. Special topics courses will be listed in the Curriculum Supplement published the semester before the course is taught. Each academic discipline can offer one 495 special topics course a semester. In addition, Department Heads should clearly indicate if third-class cadets will be allowed to enroll in the course. Fourth-class cadets cannot enroll in special topics courses without DFV approval, coordinated through DFR.

2-12. AUDITING.

a. Upper-class cadets may audit a non-core course if they have at least a 2.60 cumulative GPA. An audited course will not count toward minimum course load requirements, but does factor into maximum course load requirements. Cadets must fulfill the 3.25 GPA requirement if they exceed their maximum course loads by adding a course for audit.

b. A cadet must have the approval of the appropriate department head to audit a course. The department head or the instructor has the option of refusing an audit request.

c. A cadet may not take a course for credit at any time after receiving formal approval to audit the class and after attending one period in an audit status.

d. Class attendance will be optional for an audited course.

e. The auditor need only do minimum preparation for the audited course. An auditor will not participate in graded exercises or assignments. If an instructor feels an auditing cadet is detracting from the instructor's effectiveness, the instructor may direct the cadet to withdraw from the course.

f. Cadets may only request permission to audit a course after receiving their class schedules. A cadet’s class schedule will not be rearranged to allow the cadet to audit a course.

g. Cadets will submit the request letters IAW Figure 2-6. Upon completing the request letters, cadets return them to DFRR for processing and filing. The audited course will not appear on the cadet's transcript.

Figure 2-5
ACADEMIC WAIVER REQUEST
USAFA Form 69

ACADEMIC WAIVER REQUEST
(THIS FORM IS SUBJECT TO THE PRIVACY ACT OF 1974)
(Reference USAFAI 36-171 and the Curriculum Handbook)

AUTHORITY: Title 10 U.S.C., Sections 8013 and 133: E.O. 9397
PRINCIPAL PURPOSE: SSN is used for identification purposes.
ROUTINE USE: None.
DISCLOSURE IS VOLUNTARY: However, if information is not provided, waiver may not be processed.

TO
DFRR thru DFRS, DFR, DFRC, Academic Advisor

CADET NAME *(Last, First, MI)*	CLASS YEAR	SSN	SQUADRON	MAJOR	DATE
O'Neal Shaquille	2003	987-65-4321	CS-1	English	20020103

X **1. REASON FOR ACADEMIC WAIVER**

X Substitute Law 360 taken in semester 01B for graduation requirement Opt (Master file line number M53LB) in English major.

Delete requirement for in major.

Delete prerequisite of for .

Substitute for as prerequisite for .

Allow concurrent enrollment in and .

Delay until semester of class year.

Underload to course units.

OTHER *(Specify)*

2. ACADEMIC ADVISOR'S JUSTIFICATION

Law 360 is term-taught with the Law and English Departments. It's an in-depth study of literary works that deal with Law. This course should be counted towards an English Option

SIGNATURE Tom Jones DEPT DFSJG DATE 1/3/02

3. COMMENTS/COORDINATION *(Reference Curriculum Handbook)*

DEPARTMENT HEAD [X] APPROVE [ ] DISAPPROVE
SIGNATURE Dale Brown DEPT DFSJG DATE 1/3/02

DFR [X] APPROVE [ ] DISAPPROVE
Dean H. Wilson
SIGNATURE DATE 1/4/02

ACADEMIC REVIEW COMMITTEE CHAIRMAN [ ] APPROVE [ ] DISAPPROVE
SIGNATURE DATE

DEAN/VICE DEAN OF FACULTY [ ] APPROVE [ ] DISAPPROVE
SIGNATURE DATE

ACADEMY BOARD [ ] APPROVE [ ] DISAPPROVE
SIGNATURE DATE

USAFA FORM 69, 20010601 *(EF-V1)* PREVIOUS EDITION IS OBSOLETE

COPY DISTRIBUTION: Original - DFRR, Copies - DFRS, DFR, and Academic Advisor

Figure 2-6
REQUEST TO AUDIT ACADEMIC COURSE FORM LETTER

Date

MEMORANDUM FOR DFRR

FROM: C2C JOHN B. CLARENCE

SUBJECT: Request to Audit Academic Course

1. Request I be permitted to audit course in section ___ the fall/spring semester 20_.

2. My cumulative GPA is _____. My latest semester GPA is _____. My graded academic course-load is _____ semester hours.

3. I have a free period at the time I desire to audit this course.

4. This course is not a core or major's requirement.

5. I have not previously audited or taken this course for credit, and I understand that I will not be permitted to take this course for credit at any time after I have attended one period in an audit status, even though I may drop the audited course later during this semester.

(signature)
JOHN B. CLARENCE, Cadet USAFA

SCOTT J. TYLER, Capt, USAF concur/nonconcur
Advisor, DFCE

RAYMOND CANSELLA, Maj, USAF concur/nonconcur
AIC, DFCE

DIEMER W. AUBREY, Lt Col, USAF concur/nonconcur
Instructor of course

MELISSA T. WALDEN, Col, USAF concur/nonconcur
Professor and Head (or authorized signature)

Figure 2-7
REQUEST FOR PERMISSION TO ENROLL IN AN INDEPENDENT STUDY COURSE
USAFA Form O-498

REQUEST FOR PERMISSION TO ENROLL IN AN INDEPENDENT STUDY COURSE

(This form is subject to the Privacy Act of 1974)

AUTHORITY: 10 USC 9331.
PRINCIPAL PURPOSE: To obtain permission of instructor, advisor, and department head for enrollment in an independent study course. Becomes a part of Master Cadet Personnel Record available to USAF Academy instructors, counselors, advisors, and the Registrar's staff. SSN is used for identification purposes.
ROUTINE USE: None.
DISCLOSURE IS VOLUNTARY: However, if information is not provided, cadet may not enroll in independent study course.

CADET NAME *(Last, First, Middle)*	SSN	CLASS	SQUADRON

DISCIPLINE OF REQUESTED INDEPENDENT STUDY COURSE	SEMESTER	YEAR
	FALL	
	SPRING	

LIST COURSES COMPLETED/PRESENTLY ENROLLED IN THAT ARE RELATED TO PROPOSED TOPIC

I have checked the Curriculum Handbook to confirm that there is such a course offering and that I have met all course requirements.

CADET SIGNATURE	DATE

This form must be submitted to HQ USAFA/DFR prior to Lesson T1 of the affected semester. The title should be short and succinct; it or an abbreviation of it will appear on the cadet's official USAFA transcript. It must be typed or clearly printed. Except in special circumstances, which should be briefly explained, the title should be different from any assigned to other cadets.

I agree to instruct the above named cadet in a tutorial independent study course with the following title:

	1	2	3	4	5	6	7	8	9	10	11	12	13	14	15	16	17	18	19	20	21
LINE 1	I	N	D		S	T	U	-													
LINE 2																					
LINE 3																					

MATERIALS AND/OR EQUIPMENT REQUIRED TO ADMINISTER THIS COURSE *(If none, please indicate)*

In accordance with USAFA Curriculum Handbook, _____ semester hours will be awarded upon successful completion of this course.

INSTRUCTOR SIGNATURE	DEPARTMENT	PHONE NUMBER

I concur.

ADVISOR SIGNATURE	MAJOR	PHONE NUMBER

Permission granted.

DEPARTMENT HEAD SIGNATURE *(Department offering course)*	DEPARTMENT

USAFA FORM O-498, 19940501 (EF-V1) (HQ USAFA/DFR) PREVIOUS EDITION IS OBSOLETE

CHAPTER 3

SCHEDULING

3-1. THE ACADEMIC WEEK. The academic week in the fall and spring semesters generally consists of five days with seven 53-minute periods each. For scheduling purposes, we designate alternate weekdays as "M" and "T" days during each semester. Each two-day block (one "M" day and one "T" day) is a complete lesson. An example of a cadet's schedule, which is obtained via the CAMIS webpage, is located at Figure 3-1.

3-2. ACADEMIC COURSE SCHEDULING. DFRR has Preliminary Course Offering Information (PCOI) meetings each semester with department representatives, and the master course offering schedule is developed using course offering data, department inputs, and cadet registration information. Departments maintain accurate data on the current Master Course File listing. Each department scheduling coordinator will provide updated course file data (e.g., type of sectioning, whether or not course will be giving final exams) to DFRR upon request.

3-3. CADET EXCUSAL FROM ACADEMIC TIME. Department heads may excuse cadets from a class taught by their departments to visit specific places or agencies in the cadet duty area to perform academic research or work related to specific academic courses. When the department desires to sponsor an event which will use other than the departmentally scheduled academic time or will require cadets to depart the cadet area, the department must submit an electronic Scheduling Committee Action USAFA Form 17 request in CAMIS through their department representative at least two weeks prior to the event. You can find additional information concerning excusal and compensatory time in USAFA Instruction 36-2014.

3-4. FINAL EXAMINATIONS. The Academy Board specifies the end-of-semester final examination period. DFRR schedules end-of-semester final examination times and places for all courses that indicate a final examination requirement, as shown in this handbook and in the Master Course File. Final examination periods will not be used for cadets to brief findings on course projects. Final examination periods must be used solely for written final examinations. A portion of Foreign Language final exams may include an oral proficiency evaluation. A final examination must be at least two hours in length and account for at least 25% of the course grade. Requests for changes to an individual cadet's final examination schedule must be submitted to DFRR for approval before the published deadline advertised each semester using the on-line change process in CAMIS. DFRR coordinates with chapel personnel to accommodate specific religious worship times during final exam scheduling. English-as-a-Second Language (ESL) cadets eligible for extra time in final examinations must coordinate with individual instructors. If the extra time given requires rearranging other finals, the cadet must contact DFRR for rescheduling (see FOI 36-164, Policies and Procedures for Cadets Who Speak English as a Second Language).

3-5. THE SUMMER. During the fall semester, DFRC will publish a list of the upcoming summer academic course offerings. These courses can be found on the DFR website. Summer Programs (Para 6-8) provides further information regarding summer programs.

Figure 3-1
Cadet Academic Schedule

A cadet's academic schedule reflects 'M' day and 'T' day information The common unscheduled course is Cmsng Edu XXX. This is the cadet's Commissioning Education program designator. The academic periods are (from the Air Force Academy Cadet Wing Schedule of Calls):

0750-1623	**ACADEMIC TIME**
0750-0843	1ST PERIOD ACADEMICS
0805-0920	PHY ED PERIOD
0850-0943	2ND PERIOD ACADEMICS
0950-1043	3RD PERIOD ACADEMICS
1005-1120	PHY ED PERIOD
1050-1143	4TH PERIOD ACADEMICS
1150-1320	**NOON MEAL / MILITARY TRAINING / PERSONAL TIME**
1330-1423	5TH PERIOD ACADEMICS
1345-1500	PHY ED PERIOD
1430-1523	6TH PERIOD ACADEMICS
1530-1623	7TH PERIOD ACADEMICS

"**Course**" - course name and number**.** Phy Ed is taught in 8 lesson blocks. Armnshp is taught in 10-lesson blocks. For exact start and end lesson, please reference paragraph 3-6. Armnshp and Phy Ed courses have a suffix of A - H. Other suffixes: "H" for honors, "Y" for idea section, "Z" for experimental, "FR" is a section of 4°s, "SO" is a section of upperclassmen, and "S" for scholars.
"**Section**" - when the course is scheduled and which section. The suffix denotes the section when multiple sections are scheduled during the same period.

Day	Course	Description	Hours	Period Section	Room	Instructor
M	History 100	INTRO TO MILITARY HISTORY	3.00	M1B	5D37	Lt Col Marsha B Ivins
	Math 141	CALCULUS I	3.00	M2D	5D12	Dr. Gregory A Jarvis
	ReadSkls 103	READING ENHANC./4TH CL	2.00	M4A	1A78	Dr. Kathryn Hire
	Russian 131	BASIC RUSSIAN	3.00	M5A	4H18	Ms. Millie Hughes-Fulford
	English 111	INTRO/COMPOSITION & RESEARCH	3.00	M6B	4D6	Capt Charles Hobaugh
	ExtProg 917	INTRAMURALS/GROUPS 1/2	0.00	M7A		
T	Chem 100	APPLICATIONS OF CHEMISTRY I	3.00	T1B T2B	2M117	Capt Kevin B Chilton
	PhyEd 110D	BOXING	0.50	T3A T4A		
	Russian 131	BASIC RUSSIAN	3.00	T5A	4H18	Ms. Millie Hughes-Fulford
U	FYE 101B	FIRST YEAR EXPERIENCE	1.00	U1T		Lt Col Scott L Tingle
	Cmsng Edu 100	4CL COMMISSIONING EDUCATION	0.00	U1A		

For Official Use Only

Official Schedule as of 30 Aug 2010 13:44:17

Schedules are subject to change. Please check your schedule daily for changes up through lesson 3. Students who are enrolled in a course with an X suffix (e.g. ReadSkls 103X, StudySkls 102X), should understand that these courses will be taught during the second half of the semester. If you are enrolled in the ReadSkls course, the instructor will email you with instructions on when the class begins. Some cadet schedules may have course conflicts. If you have an unscheduled course or course conflict in your schedule, please contact your advisor or phone the scheduling office at 333-4095.

3-6. COURSES WITH UNUSUAL SCHEDULES.

a. Armnshp 251/472/490. Armnshp 251 (Basic Soaring) and Armnshp 472 (Soaring Instructor) are taught in ten-lesson blocks, three consecutive contact hours, over-scheduled with Phy Ed. Armnshp 490 (Basic Parachuting) is taught in a ten-lesson block, two consecutive contact hours, over-scheduled with Phy Ed.

b. Pseudo Courses. Phy Ed 8xx and 9xx are pseudo courses scheduled for 1st, 2nd, 5th, 6th, and/or 7th period. Athletes are enrolled in these courses to block out practice time. Ext Prog 7XX is a pseudo course that blocks out one academic period for scheduling purposes.

c. Eight/Ten Lesson Block Courses. Courses that meet for 8- or 10-lesson blocks (Armnshp and Phy Ed) are identified with the following suffix (see table below):

	A Block:	Lessons M1 – T10		E Block:	Lessons M1 – T10
Fall	B Block:	Lessons M11 – T20	Spring	F Block:	Lessons M11 – T20
	C Block:	Lessons M21 – T30		G Block:	Lessons M21 – T30
	D Block:	Lessons M31 – T40		H Block:	Lessons M31 – T40

SCHEDULE	PHY ED	AIRMANSHIP (JUMP/SOAR)	STUDY SKILLS READING SKILLS
Fall A (M1-T10)	M1-T8 AFT M9/T9 PFT M10/T10 & M12/T12	M1-T10 PFT M12/T12 AFT M32/T32	M1-T20 PFT M31/T31 AFT M32/T32
B (M11-T20)	M13-T20	M11-T20 AFT M9/T9 PFT M10/T10	
C (M21-T30)	M23-T30 PFT M31/T31 AFT M32/T32	M21-T30 AFT M9/T9 PFT M10/T10 & M12/T12	M21-T40 AFT M9/T9 PFT M10/T10 & M12/T12
D (M31-T40)	M33-T40		
Spring E (M1-T10)	M1-T8 AFT M9/T9 PFT M10-T11	M1-T10 PFT M11/T11 AFT M32/T32 1˚ AF-PFT M22/T22	M1-T20 PFT M31/T31 AFT M32/T32
F (M11-T20)	M13-T20 1˚ AF-PFT M22/T22	M11-T20 AFT M9/T9 PFT M10/T10 1˚ AF-PFT M22/T22	
G (M21-T30)	M23-T30 PFT M31/T31 AFT M32/T32 1˚ AF-PFT M32/T32	M21-T30 AFT M9/T9 PFT M10-T11 AF-PFT M32/T32	M21-T40 AFT M9/T9 PFT M10-T11
H (M31-T40)	M33-T40	M31-T40 AFT M9/T9	

		PFT M10-T11 1˚ AF-PFT M22/T22	

d. Twenty Lesson Block Courses. Reading Skills 103/103X, Reading Skills 201/201X, Armnshp 420/420X (Powered Flight Program), Armnshp 201 (Advanced Fundamentals of Air Force Unmanned Aviation and Intelligence, Surveillance, and Reconnaissance), and Cyber 466 meet for 20 lessons. The suffix identifies which 20 lessons the cadet will attend.

Lesson M1-T20	*Lesson M21-T40*
Read Skls 103, Read Skls 201	Read Skls 103X, Read Skls 201X
Armnshp 420	Armnshp 420X
Armnshp 201	Armnshp 202X
Cyber 466	

e. "Idea" Program. The Idea Program is a program that places cadets who are in one section of one course together in a section of another course that relates material learned in both courses. The course material taught, the GRs given and syllabi used are identical to those used in the parent courses. The course is identified on a cadet's schedule by a Y suffix.

f. Experimental Courses. Experimental courses are courses testing new instructional material. They are identified on the cadet's schedule by a "Z" suffix.

g. Study Skills 101 (Strategies for Academic Success). A two semester hour course administered by Student Academic Services (DFRL) in the fall for fourth-class cadets identified as "academically at-risk." Other cadets are welcome to take this course. If volunteering for this course, cadets will be registered for Study Skls 101Y.

h. Study Skills 102: A one semester hour condensed version of the Study Skills 101 course. It is offered once in the spring and once in the fall after mid-semester grades are released.

i. Reading Skills 103/103X. Reading Enhancement for First-Year Cadets. A two semester hour, half-semester reading skills course tailored for fourth-class cadets. When registering for this course, please specify preference for taking course during first-half (e.g., Read Skls 103) or second-half of semester (e.g., Read Skls 103X).

j. Reading Skills 201/201X: Reading Enhancement. A two semester hour, half-semester reading skills course. When registering for this course, specify preference for taking course during first-half (e.g., Read Skls 201) or second-half of semester (e.g., Read Skls 201X). If you received credit for Read Skls 103, you may NOT enroll in Read Skls 201/201X .

k. Double-Period Courses. Only valid laboratory courses may be double-period courses. Valid double-period academic core courses with three semester hours credit may include up to 10 syllabus-specified laboratory periods in a given semester. Other lessons must end at 53 minutes. 100-level foreign language courses are exempt from this policy and therefore may include up to 40 laboratory periods per semester. Non-core double-period courses are not affected by this policy and may include up to 40 laboratory periods per semester.

l. Excusal Codes. Intramural excusal codes and intercollegiate excusal codes help schedulers block out the appropriate time in cadets' schedules for participation in the appropriate athletic activities. The most common codes block out two cadet groups for intramurals during either period M7 (Ext Prog 917) or T7 (Ext Prog 927) or intercollegiate practice time M afternoon (Phy Ed 815 or Phy Ed 915) or T afternoon (Phy Ed 825 or Phy Ed 925).

3-7. MINIMUM ENROLLMENT SIZE FOR MAJORS AND CLASSES. At least 12 graduates per major are expected to graduate yearly. If the number of graduates in a major falls below 12 yearly for two successive years, the major is placed on a warning list. After three more successive years with an average of less than 12 graduates in the major, the major will be eliminated from the curriculum unless the Dean of the Faculty approves an academic waiver. Minimum enrollment for any course, excluding independent study courses, is six cadets. No course will be taught with fewer than six cadets without a waiver from the Vice Dean.

CHAPTER 4

GRADING

4-1. GRADES AND QUALITY POINTS. A cadet's performance in any graded course of instruction is officially reported to Student Academic Affairs at mid-semester and end-of-semester or summer term as one of the following grades: A, A-, B+, B, B-, C+, C, C-, D, F, WP, WF, and I (discussed in special grades). Deficient grades include C-, D, and F. At mid-term, grades reported in courses ending before or at mid-term are final grades. Following is a list of grades, their quality points (QP), and course quality points.

GRADE	QUALITY POINTS (QPs)	COURSE QPs (3 Sem Hrs)	COURSE QPs (0.5 Sem Hrs)
A	4.0	12.0	2.00
A-	3.7	11.1	1.85
B+	3.3	9.9	1.65
B	3.0	9.0	1.50
B-	2.7	8.1	1.35
C+	2.3	6.9	1.15
C	2.0	6.0	1.00
C-	1.7	5.1	0.85
D	1.0	3.0	0.50
F	0.0	0.0	0.00

4-2. GRADES. Final grades are awarded at the end of the semester and are reflected on each cadet's official transcript. Mid-term grades are awarded after lesson T20 but are not recorded on a transcript. Departments must ensure mid-term grades are worth 25% or more of courses' final grades. For students enrolled in summer academics and summer training programs, permanent grades are finalized in August. During all final grading cycles, semester and cumulative Grade Point Averages (GPA), Military Performance Averages (MPA), and Physical Education Averages (PEA) are recomputed and appear on each cadet's personal grade report.

4-3. DEPARTED CADET GRADE ASSIGNMENTS. Periodically, between final grading cycles, cadets permanently depart the Academy. Upon their departure, the Office for Student Academic Affairs requests final grade assignments from each department in which the cadet was enrolled by issuing a "Drop/Add Authorization Sheet" to the department. These Drop/Add sheets should be returned with a final grade assignment to DFRR within three working days. Types of grades that may be awarded are addressed in Special Grades (para 4-6). Failure to promptly return departed cadets' grades will result in an administrative hold on departed cadets' USAFA transcripts.

4-4. GRADE CHANGES. Grade changes should be sent to DFRR as expeditiously as possible so that products can be updated. Because grade change letters are microfilmed, all grade changes accomplished IAW USAFA Instruction 36-3504, Assigning and Processing Formal

Grades, should be signed by the appropriate department head and be in the following format:

a. Department:
b. Course:
c. Semester/Term:
d. Prog Grade or Final Grade
e. Cadet:
f. SSAN:
g. Class Year:
h. Squadron:
i. Change Grade from _____ to _____
j. Rationale:

4-5. ACADEMIC APPELLATE PROCEDURE. A cadet may appeal a grade or other academic issue directly to the instructor and course director. If the matter is not resolved satisfactorily to the cadet, the cadet may appeal in writing to the department head concerned, stating specific objections. Under USAFA Instruction 36-3504, Assignment and Processing of Formal Grades, department heads maintain ultimate responsibility for assignment of and changes to letter grades. Normally, the department head's decision is final. In appropriate cases, the Dean of the Faculty may request the appropriate Division Chair review the appeal case for overall fairness, consistency, and appropriateness, and make recommendations to the Dean of the Faculty for final resolution.

4-6. SPECIAL GRADES. The cadet's official transcript, mid-semester grade report, or the end-of-semester grade report may contain the following notations: P (passing), N (no grade, continuing with no penalty), W (withdrawn), WP (withdrawn passing), WF (withdrawn failing), IC (incomplete controllable--a grade indicating questionable status in a course), and IU (incomplete uncontrollable). These grades carry no quality points and are not used in computing any GPA.

a. A "P" grade is awarded when a cadet is satisfactorily performing or has satisfactorily completed a non-graded course (e.g., Armnshp 251).

b. An "N" grade is a temporary computer code indicating a course has not yet been completed. "N" grades may not be awarded as final grades in a course.

c. A "W" grade is awarded when a cadet withdraws from a course between Lesson M9 and Lesson T20. If a cadet drops a full-semester course after T20, the department concerned awards the cadet a "WP" or "WF" grade, as appropriate. The academic department has three working days from the time of notification that the cadet has withdrawn from the course to forward the awarded grade to DFRR. If the cadet completed the course requirements before the end of the semester (e.g., a course that has no final exam), the department will submit a final grade to DFRR.

d. An "IC" or "IU" grade is a temporary grade given at the end of the semester, or a penalty grade given at a progress report. "IC" or "IU" grades indicate a cadet's questionable status in

a course. "IC" or “IU” grades may be awarded in graded courses as well as in pass/fail courses. They may be "controllable" or "uncontrollable" incomplete grades. All incomplete grades will be reported to DFRR by the suspense date outlined in the DFR incomplete grade letter published at the beginning of each grading cycle. The department awarding the “IC” or “IU” grade sets the suspense for the cadet to clear the grade; however, DFRR closely monitors the cadet's progress toward clearing the incomplete. When “IC” or “IU” grades are cleared and all course work is completed, a permanent grade will be assigned. DFRR must be notified immediately of the grade change so that all products associated with a grade change (i.e., transcripts, APSs, GPAs, Honor Lists) can be updated. If a cadet is out processing, “IC” or “IU” grades must be resolved prior to departure.

(1) Uncontrollable incomplete “IU” grades indicate that work has not been completed for causes outside the control of the cadet, such as medical incapacity or emergency.

(a) Mid-semester: Uncontrollable incomplete work for full-semester courses at the mid-semester report will be awarded an "IU" grade.

(b) End-of-Semester: Uncontrollable incomplete work will be monitored by the department awarding the "IU" grade and will be completed at the earliest opportunity. The cadet is not placed on restriction or academic probation solely for this "IU" grade. An uncontrollable incomplete grade can be carried for a maximum of one year, but must be resolved before graduation.

(2) Controllable incomplete “IC” grades indicate the cadet was responsible for failure to complete an assignment. Controllable causes include cadet's failure to complete an assignment considered to be important for evaluating course work.

(a) Mid-semester: Controllable incomplete “IC” grade indicates that for reasons within the control of the cadet, work has not been completed. Cadets in this situation will be placed on academic probation for the next grading period.

(b) End-of-Semester: Cadets earning controllable incomplete grades will be restricted to USAFA through finals (affects cadets earning "IC" grades in courses with no final exam). If incomplete work is completed by the end of finals, a grade will be awarded and the cadet will not be placed on academic probation solely due to the "IC" grade. If incomplete work is not completed by the end of finals, the department issuing the "IC" may assign a final letter grade IAW USAFA Instruction 36-166, Assignment and Processing of Formal Grades, or allow the cadet to carry the incomplete into the next semester. It is highly encouraged that departments issue a final fall semester grade for all first-class cadets before lesson 3 of the spring semester. First-class cadets may need to add or retake a course to meet graduation requirements. Any cadet with an outstanding controllable incomplete grade at the end of a semester will be placed on academic probation and will be subject to academic disenrollment.

e. Grade assignments for 10- or 20-lesson block pass/fail courses. The following provides

guidelines for assignment of grades to cadets who are disenrolled from Airmanship or other 10- or 20-lesson block pass/fail courses. If the cadet withdraws from a course before the completion of all course requirements, the following criteria will be used in assignment of pass/fail grades:

(1) If the cadet completed 5 or fewer of the 10 or 20 required lessons, assign a "W."

(2) If the cadet completed at least 6 lessons but less than the entire course, assign either a "WP" or a "WF."

(3) If the cadet completed the entire 10- or 20-lesson course, assign either a passing "P" or failing "F."

4-7. TRANSFER AND VALIDATION CREDIT. No quality points are awarded for transfer or validation credit. All transfer and validation credits may be applied toward graduation requirements, providing that the cadet completes a minimum of 131 semester hours in residence at USAFA. DFR enters transfer/validation credit into a cadet's record after being informed, in writing, by the academic department/agency responsible for the applicable course.

4-8. GRADE POINT AVERAGE. A cadet's semester and cumulative GPAs are determined by dividing the total quality points earned in all graded courses by the total semester hours attempted. DFRR publishes semester and cumulative GPAs to the nearest .01 for each mid-semester and end-of-semester grade report. When a cadet repeats a course, the GPA is recomputed as follows:

a. The cumulative GPA is adjusted with the previous grade being replaced by the most recent grade. Up to 13 semester hours may be replaced in the cumulative GPA in this manner, but all grades will remain on the transcript. If a cadet repeats more than 13 semester hours of courses, the grades for all additional courses repeated will not replace the previous grades, but will be calculated into the cumulative GPA along with the previous grade. Courses that can be used to replace a grade also include core substitutes (e.g., ECE 315 replacing ECE 231), courses approved for the Science and Technology Energy/Systems Option (e.g., Geo 310 replacing Mech Engr 312), and 100-level foreign language courses (e.g., Portuguese 132 replacing Arabic 132).

b. If a course is repeated in the same semester, both grades count in semester GPA computation. For cadets who repeat a spring course in the summer, both grades count in a combined Spring/Summer recomputed semester GPA. The cadet will remain on academic probation if the combined semester GPA is below a 2.0.

c. Students must have a passing grade to replace an "F" grade in the cumulative GPA. If a repeat "F" grade is earned, both "F" grades will count in the cumulative GPA. When a cadet takes a course for a third time and receives a passing grade, the newest grade will replace only the grade from the second attempt; the grade from the first attempt will remain factored into the cumulative GPA.

d. The semester GPA will include the grades of courses taken that semester, regardless of whether or not the course was taken previously or was subsequently repeated.

e. When considering whether or not to repeat a passed course, a cadet must note that it is the most recent grade, not necessarily the best grade that is computed in the GPA.

4-9. MAJOR'S GPA. The major's GPA includes grades for courses designated by the Department Head responsible for that major, regardless of whether or not the course is being used to satisfy a major's requirement. Courses which count toward the major's GPA are annotated by an 'M1' ('M2' for a second major) on the academic grad check.

4-10. OVERALL PERFORMANCE AVERAGE (OPA). The graduation class standing is based on cadet cumulative Overall Performance Average (OPA). OPA is the weighted combination of 60% cumulative Grade Point Average (GPA), 30% cumulative Military Performance Average (MPA), and 10% cumulative Physical Education Average (PEA). The top 10% are selected Distinguished Graduates. GPA normally includes Phy Ed grades. For the calculation of OPA, Phy Ed grades are removed from the cum GPA.

$$OPA = 60\% \text{ GPA} + 30\% \text{ MPA} + 10\% \text{ PEA}$$

4-11. GRADUATION RECOGNITION

RECOGNITION	GRADUATING CLASS	BASED ON
Distinguished Graduate	Up to top 10%	(OPA)
Preference for Graduate Education	Top 15%	(OPA)
With "Academic Distinction"	Top 10%	(GPA)
With "Military Distinction"	Top 10%	(MPA)
With "Athletic Distinction"	Top 10%	(PEA)

4-12. HONOR LIST REQUIREMENTS. Any probation or honor rehabilitation precludes placement on an honor list.

a. Dean's List. Cadets who earn a semester GPA of at least 3.0 in academic courses will be on the Dean's list. These cadets are authorized to wear the Dean's pin on their uniform for the next semester. Physical Education grades are not included in Dean's list calculations. It is possible for a cadet to have a semester GPA over 3.0 and still not be on the Dean's list if the Phy Ed grades pulled the GPA over 3.0. Likewise, it is possible for a cadet to have a semester GPA slightly less than 3.0 and be on the Dean's list if the Phy Ed grades were low. Also note that only the semester GPA determines the Dean's list. Therefore, cadets cannot be placed on the Dean's list based on Prog (mid-semester) grades or Cum GPA. However, cadets may be removed from the Dean's list at Prog if their mid-semester grades put them on academic probation. Summer grades are not included in Dean's list calculations.

b. Athletic Director's List. Cadets who earn a semester Physical Education Average (PEA) of at least 3.0 will be on the Athletic Director's list. These cadets are authorized to wear the Athletic Director's pin on their uniform for the next semester. PEA is a weighted 4.00

grading scale (50% Physical Fitness Test + 35% Phy Ed course grades + 15% Aerobic Fitness Test).

c. Commandant's List. Starting with fall 2009 Military Performance Appraisals (MPAs), cadets in the top third of their class year by semester MPA will be on the Commandant's list. Prior to fall 2009, cadets who earned a semester MPA of at least 3.0 were on the Commandant's list. These cadets are authorized to wear the Commandant's pin on their uniform for the next semester.

d. Superintendent's List. Cadets who earn semester performance averages (GPA, PEA, and MPA) to merit placement on the Dean's, Athletic Director's, and Commandant's lists will be on the Superintendent's list. These cadets are authorized to wear the Superintendent's pin on their uniform for the next semester.

CHAPTER 5

ACADEMIC DEFICIENCY AND PROBATION

5-1. ACADEMIC DEFICIENCY

a. A cadet is deficient in studies at the mid-semester progress report or the end of a semester/summer term under the following conditions:

(1) A grade of "F" or a controllable incomplete "IC" grade in one or more courses, whether graded or pass/fail.

(2) Semester, core, and/or cumulative GPAs less than 2.00. Deficiencies in core GPA will not be tracked for academic probation (ACPRO) status until a cadet's 4th semester.

(3) First-class cadets are deficient and may be placed on academic probation if their majors' GPAs are less than 2.00.

b. Academic Review Committees (ARCs) review cadets in the following categories:

(1) Cadets whose academic records meet any one of the following criteria are considered to be seriously deficient in academics. The ARCs review those cadets' records to determine if the cadets should be recommended for disenrollment or if any other appropriate action is necessary.

(a) Multiple Failures. More than one "F" grade in one semester.

(b) Very Low GPA. A GPA considered being seriously deficient and warranting special consideration by the ARC. Very Low GPAs may be either semester or cumulative, and vary by semester as shown below.

SEMESTER	SEM GPA LESS THAN	CUM GPA LESS THAN	CUM CORE GPA LESS THAN
1	1.50	1.50	
2	1.50	1.70	
3	1.50	1.80	
4	1.50	1.90	2.00
5	1.50	1.95	2.00
6	1.60	2.00	2.00
7	1.70	2.00	2.00
8 or later	1.80	2.00	2.00

(c) Repeat Failure. Repeat failure ("F" grade) in the same course, whether core or elective and regardless of the number of semester hours.

(d) Two sequential semesters of either low or very low semester and/or cumulative GPA. Low, vice very low, GPAs are defined in paragraph 5-1b(2)(a).

(e) Failure to achieve a 2.00 semester or cumulative GPA in 3 sequential semesters.

(f) Multiple deficient semesters. 3°s that were deficient three of their first four semesters.

(g) Multiple Probations. Deficient in academics and aptitude, conduct, honor, and/or athletic performance.

(h) Under loaded third classmen. Academically deficient third-class cadets who have not carried at least 19 semester hours in either the 3° fall or spring semester, assessing their probability of completing graduation requirements on time.

(2) Low GPA Review. Any cadet whose academic record meets any of the following criteria is considered to be deficient in academics:

(a) Semester, core, and/or cumulative GPA less than 2.00 but greater than the GPA defined in paragraph 5-1b(1)(b).

(b) For first-class cadets, a major's GPA less than 2.00.

(c) Single "F" grade. One "F" grade in an academic major, core, or elective course.

(d) Controllable incomplete "IC" grade. Willful incompletion of a course requirement.

5-2. PLACEMENT ON ACADEMIC PROBATION. The guiding directive for academic probation is USAFA Instruction 36-3523, Review and Disposition of Deficient Cadets.

a. All academically deficient cadets will be placed on academic probation at mid-semester, end-of-semester, or at the end of the third summer term if they attended summer academics. Cadets are effectively on academic probation from the date of publication of a progress report on which they are deficient as described in paragraph 5-1.

b. AOCs are responsible for pulling their cadet squadron's probation report from CAMIS immediately after mid-semester grades are released and at the beginning of each semester.

5-3. ACADEMIC PROBATION POLICIES. The following are roles, responsibilities, and expectations of cadets, advisors, and AOCs to fulfill the requirements of academic probation.

a. Cadets placed on academic probation must submit by email a fully coordinated USAFA Form 68 to their AOC, Academic Advisor, CADO, and ARC Coordinator within 10 days of being placed on probation at mid-semester, within 10 days of the beginning of a new semester, or as directed by the Academic Review Committee.

b. Probationary cadets are expected to work with their cadet chain of command, CADO, Academic Advisor, and AOC to complete the Form 68. The purpose of the USAFA Form 68 is to identify precisely why a cadet is failing to perform academically, develop a plan of action to counteract the reasons identified, to determine if the cadet is motivated to make the necessary changes, and to capture the commitment of the cadet's support structure. Probationary cadets are expected to take responsibility for their academic deficiency, seek counsel, and to work hard towards academic **EXCELLENCE** not simply towards becoming marginally proficient. Probationary cadets are failing academically and failing to internalize Air Force Core Values.

c. Probationary cadets are primarily responsible for proactively completing the USAFA Form 68 on time and for seeking academic help. All cadets should check their grades as soon as they are released by the Academy Registrar. Cadets are expected to know if they are on probation by reviewing their grades in relation to the deficiency standards in paragraph 5-1. Deficient cadets are on probation and will be reviewed by the Academic Review Committee. Deficient cadets do not need to wait for a probation list to know that they are on probation. Probationary cadets should begin the Form 68 process immediately after grades are released. USAFA provides countless resources designed to aid cadets in achieving success. Probationary cadets will work with their element, flight, and academic cadet staffs, their Academic Advisors, and their AOCs to design a personalized academic Action Plan that if followed ensures the cadet will be on the path towards achieving academic excellence.

d. Cadet Squadron AOCs are responsible for knowing which of their assigned cadets are deficient academically, the key factors causing probationary cadets to fail, and how probationary cadets are going to change to achieve academic excellence. AOCs are responsible for pulling a list of probationary cadets from CAMIS and providing a list of cadets on academic probation to the cadet squadron Academic Officer immediately after grades are released by the Academy Registrar. Any delay in providing the AcPro list to the CADO could jeopardize the intended timeline for completing the USAFA Form 68.

e. AOCs are expected to meet with academically deficient cadets before the Form 68 can be final. The AOC may direct revisions to the probationary cadet's evaluation, statement, and action plan. AOCs are expected to provide routine oversight of academically deficient cadets and help ensure probationary cadets are following through with their action plans.

f. AOCs will work closely with squadron academic officers in developing a squadron academic policy that enables all cadets to achieve academic excellence and to ensure its proper implementation.

g. Academic Advisors are expected to meet with their probationary advisees shortly after grades are released to provide guidance in identifying factors for academic failure, to discuss the personal change that is required to achieve academic excellence, and to refer the cadet to the appropriate support offered by USAFA. Academic Advisors are primarily responsible for documenting Consultations using the USAFA Form 68 in a way that will most benefit the probationary cadet in their pursuit of academic excellence.

h. Squadron Cadet Academic Officer (CADO) responsibilities.

(1) The AOC will provide the CADO a list of academically deficient cadets assigned to their squadron on lessons M1 and M22.

(2) CADOs will meet with all academically deficient cadets individually and help the cadet initiate the Form 68 no later than lessons M2 and M23.

(3) CADOs provide primary oversight for the completion of the USAFA Form 68 within the directed timelines. Probationary cadets appealing a disenrollment vote by the ARC Records Review may only have 5 days to complete the entire USAFA Form 68 process and will require priority over other probationary cadets.

(4) CADOs provide a statement in field 3 of every USAFA Form 68 and are required to assign and validate WACQs as part of every probationary cadet's Action Plan. (See additional WACQ guidance at the back of this handbook).

(5) CADOs are required to develop squadron academic policies that ensure all cadets can achieve excellence in academics and employ all the resources offered by USAFA to include the Writing Center, Quantitative Reasoning Center, and library.

(6) CADOs are responsible for ensuring military training and other squadron functions do not interfere with a cadet's ability to achieve academic excellence, to attend Consultations directed in section 5a of the USAFA Form 68, or to attend professional tutoring services.

(7) CADOs are responsible for ensuring Academic Call to Quarters is a quiet and studious environment where cadets can achieve academic excellence.

(8) CADOs are responsible for compiling a list of in-squadron academic tutors and for establishing a squadron tutoring plan. The tutoring plan should be made available to all squadron members (especially 4 degrees), provide incentives for tutors to participate, and ensure all cadets benefit from the tutoring offered. Peer tutoring should not take the place of seeking EI, Writing Center tutorials, or attending the Quantitative Reasoning Center. The Squadron Tutoring Plan should be developed to compliment the resources USAFA professionally offers.

(9) CADOs are responsible for developing a WACQ monitoring program and an incentive policy in coordination with the cadet squadron staff and the AOC. The incentive policy should encourage probationary cadets to become proactive learners, to seek resources beyond what is prescribed in their USAFA Form 68 Action Plans, and that require probationary cadets to proactively manage the requirements of and track the progress in their courses on a daily/weekly basis.

(10) Example probationary policy MFR: Academic Probation Policy Template

A. The purpose of this memorandum is to detail the process by which cadets on academic probation may sign out on weekends after completing the below requirements.

B. The intent of this policy is to replace a blanket restriction with a goal oriented program that will reward academic efforts on a weekly basis and encourage good academic habits for those on academic probation. Ideally, this system will encourage lifelong habits, organization, and study skills that will help probationary cadets for the remainder of their cadet and professional careers. This policy should give academically deficient cadets reasonable and attainable goals while providing opportunities to earn sign-out privileges on a weekly basis. If the probationary cadet uses the program as intended, they will get in a cycle of being ahead academically and be able to use their weekends to recharge for the next week's challenges. If at any point the cadet is not meeting the intentions of this program, they may return to normal probation restricted status and will not be allowed to sign-out on the weekends.

C. Cadets on Academic probation will maintain an academic folder or binder. It must contain the following information:

(a) The cadet's academic schedule for the current semester.
(b) An up-to-date grade tracker for all classes in which the cadet is currently enrolled.
(c) An assignment calendar that is filled out with every GR, project, paper, quiz, and any other assignments that will have an impact on the cadet's current grades.
(d) A record of all counseling documents related to academic probation.
(e) A completed academic action plan (USAFA Form 68).

5-4. REMOVAL FROM ACADEMIC PROBATION. Cadets will be removed from all conditions of academic probation when their semester, core and cumulative (and major's GPA for first-class cadets) performance meet the minimum GPA of 2.00 with no "F" or controllable incomplete "IC" grades at mid-semester, end-of-semester, or end-of-summer term report.

a. Cadets having not yet repeated and not currently repeating a previously failed core course will remain on academic probation.

b. Cadets on academic probation at the end of spring semester remain on academic probation through the summer, until the fall mid-semester progress report, unless conditions for probation are corrected by summer academic performance. Upon completion of summer course work, summer grades will be combined (for determining academic probation status only) with spring semester course work to determine the combined "spring-summer" semester GPAs. If cumulative and spring-summer combined "semester" GPAs are 2.00 or greater and all failed courses have been repeated, the cadet will be removed from academic probation.

c. Cadets with outstanding controllable incomplete "IC" grades will remain on academic probation until the grading cycle after the “IC” grade is removed. Also, cadets will remain on academic probation until they are passing a failed core course.

d. Cadets will not be removed from academic probation at any time other than indicated above unless they were placed on academic probation through administrative error. Cadets who drop a course after the mid-semester progress report are not removed from academic probation solely because the deletion of a deficient course "raises" their core, semester or cum GPA. These cadets remain on academic probation until the end-of-semester progress report.

5-5. ACADEMIC REVIEW COMMITTEE RESPONSIBILITIES

a. Mid-semester ARC. Each ARC Chair and coordinator will review the records of deficient cadets and may make recommendations or directives to cadets. No retention/disenrollment voting occurs at mid-semester meetings.

b. End-of-Semester/Summer ARC. Full voting membership ARC meetings are held at the end of each semester and at the end of the summer term. Reviews include all academically deficient cadets.

(1) The ARC recommends cadets for disenrollment, nine semesters, conditional turn back, late graduation, and the Bachelor of Science Program. The committees will recommend that cadets deficient in studies be disenrolled unless it is determined that both overall performance and probability of successful academic program completion justify retention.

(2) Decisions by the ARC to retain cadets are final. Should the committee decide that a cadet's overall performance and probability of successfully completing an academic program justify retention, it will recommend or direct one or more of the following:

(a) Continue with class.

(b) Seek assistance from appropriate agency (see Figure 5-1a, Block 2b).

(c) Underload or drop to a normal load during the current or future semester (See Chapter 2).

(d) Remove from advance placement course to lower-level course (coordinate with sponsoring department head).

(e) Repeat a course or complete an incomplete grade (See Chapter 4).

(f) Recommend/direct change or drop major.

(g) Recommend/direct withdrawal from or limit participation in intercollegiate

athletics, with coordination through the appropriate eligibility committee and AD.

(h) Withdraw from or limit participation in extracurricular activities.

(i) Recommend/direct withdrawal from or limit participation in military duties, with coordination through the Commandant of Cadets representative.

(j) Be automatically reviewed at a future progress report.

(k) Direct enrollment in summer academics in lieu of leave.

(l) Any other recommended/directed action appropriate to an individual cadet's case.

5-6. ACADEMIC REVIEW COMMITTEE PREPARATION

a. Committee Coordinator Responsibilities:

(1) Ensure committee members are trained in responsibilities and procedures.

(2) Distribute cadet deficiency reports at each progress report.

(3) Prepare and distribute records review/interview schedules, agendas, and APSs as soon as possible to ARC members and academic departments prior to end-of-semester/summer ARC meetings.

(4) Prepare deficient cadet records and brief them during committee review.

b. Group and Squadron Air Officer Commanding (AOC) Responsibility: Squadron AOCs will forward end-of-semester/summer evaluations to the ARC Chair through Group AOCs. These evaluations will include any data the AOC believes to be significant for ARC decision-making (e.g., suitability for commissioning, Weekend Academic Calls to Quarters (WACQs) assigned/served, probationary status, and personal and medical information).

c. Academic Advisor/AAOCA Responsibility: Under the procedures of USAFAI 36-3523, advisors have a significant role. They function as extensions of the Academic Review Committees.

(1) The ARC requires advisors to oversee cadets in all categories of academic probation in completing the USAFA Form 68, Cadet Academic Deficiency Evaluation and Probation Action Plan (see figures 5-1a and 5-1b). If ARC directives require a scheduling change, an APS must be coordinated as soon as possible. All cadets on academic probation must be counseled within 10 duty days after the beginning of the following semester and publication of grades. The USAFA Form 68 is the advisor's only written statement accepted by the ARC.

(2) Advisors are primary sources of information to the ARC. Advisors must therefore

serve as detectives or diagnosticians and attempt to discover the real causes of poor academic performance.

(3) The following suggestions are useful while preparing a USAFA Form 68.

(a) Understand the ARC will look unfavorably on any cadet who has needed Extra Instruction (EI) and can't document that quality EI was sought.

(b) Communicate any directives clearly to the cadet.

(c) Diagnose the problem and assist in developing a specific course of action.

(d) Don't assume that the cadet's view of his or her level of effort or standing in the course is an objective/realistic one.

(e) When you direct the cadet to see you at specified intervals, make them frequent enough to serve an effective oversight function. Once a month is too infrequent.

(f) The USAFA Form 68 should reflect an individualized plan, since each cadet's situation is unique and requires personalized attention to ensure academic success.

(g) If the advisor will not be available for the Cadet's appeal interview, they must submit a written comment card, memo for record, or be very clear on the USAFA Form 68 as to their retain or disenrollment recommendation and supporting bullets. In addition, the advisor must ensure another advisor from the same academic department can advise the cadet through the appeal process and during the appeal interview.

d. Academically Deficient Cadet Responsibilities: Deficient cadets will complete a USAFA Form 68 according to the instructions and submit it to their academic advisor/AAOCA within 10 duty days after the publication of progress reports. Exception: Cadets recommended for disenrollment must complete a USAFA Form 68 with their appeal package if they intend to appeal the recommendation. If cadets fail to complete a USAFA Form 68 and deliver it to their academic advisor/AAOCA by the established deadline date, the academic advisor/AAOCA will initiate coordination with the squadron AOC and squadron cadet academic officer.

e. Instructor Responsibilities:

(1) Mid-semester. The ARC requires instructors to complete computerized comment cards for all cadets who earned C-, D, and F grades in their course.

(2) End-of-Semester. The ARC requires instructors to complete computerized comment cards for all cadets who earned C-, D, and F grades in their courses and for all cadets listed on ARC comment card rosters.

(3) End-of-Semester ARC Interviews. Instructors may complete a letter of recommendation for cadets who elect to appeal an ARC disenrollment recommendation. Granting a cadet's request for a letter is an instructor prerogative, not a requirement.

(4) End-of-Summer Term. The ARC requires all academic instructors complete a comment card on cadets who have earned a final "C-", "D", or "F" grade in their courses and for any additional cadets, as requested by the ARC. Instructors must submit comment cards to the Summer Academics Program coordinator in DFRC no later than two days after the last day of summer term classes.

f. Medical Staff Responsibilities. The medical representative will review the medical records of cadets appealing a disenroll recommendation. The medical representative need not be present at committee meetings, but if there is significant medical information, either written or verbal comments need to be prepared for the committee. A negative reply to the coordinator prior to committee meetings is required.

g. Athletic Representative Responsibilities. The athletic representative will review the athletic and physical education records of all reviewed cadets.

5-7. ACADEMIC REVIEW COMMITTEE PROCEDURES

a. Although ARCs review records and issue directives at mid-semester, they may review cadets for retention/disenrollment only at end-of-semester/summer progress reports.

b. During the review, ARCs consider all pertinent information. A profile or character sketch of the cadet is composed using information from the instructor comment cards, formal records of counseling, military performance appraisals, athletic ratings, and medical history. Cadets, advisors/AAOCAs, and AOCs do not attend records reviews.

c. ARC coordinators send notification letters, listing ARC actions and recommendations, to cadets after the records were reviewed. Advisors and AOCs receive copies.

d. Cadets recommended for disenrollment after a records review receive a letter via CAMIS through their AOC notifying them of a mandatory formation to receive information about the ARC process. At this meeting, the ARC coordinators distribute official disenrollment recommendation notification letters and brief cadets on the appeal process. After receiving this documentation, cadets have 72 hours to choose one of the following two options:

(1) Personal Interview. Cadets directly address the ARC. Appealing cadets may submit written statements for consideration at the personal interview. Written appeal packages are due to the ARC coordinator no later than five days after receipt of the official notification letter. The ARC interview is the only time cadets are permitted to present their cases verbally and/or in writing. To exercise this right, a cadet must appear in person on the date, time, and location the cadet is scheduled to appear. Cadets will not be allowed to call witnesses to testify in person before the ARC, although the advisor/AAOCA and AOC are required to attend. When preparing for an ARC interview, a cadet should do the following:

(a) Give mature consideration to the situation.

(b) Be prepared to be open and frank with the committee and, while not making excuses, discuss personal matters, if any, which affected academics.

(c) Before the committee interview, meet with the academic advisor/AAOCA to complete the USAFA Form 68 and to design an academic program that provides the best opportunity for academic success.

(d) Come into the ARC interview with a plan and be prepared to take responsibility for your current situation. The plan should be a realistic assessment of ability and potential. Set attainable goals; discontinue habits that netted the current poor results.

(e) Consult with current course instructors to establish a "get well" plan of action IAW the USAFA Form 68, Cadet Academic Deficiency Evaluation and Probation Action Plan.

(2) Waiver of personal interview and written statements.

e. The ARCs interview cadets who elect option (1) above no earlier than the day after appeal packages are due. After the interview, the ARC re-votes to retain or recommend disenrollment of the appealing cadet.

(1) Student Academic Affairs sends notification letters containing ARC actions, via AOCs and Academic Advisors, to cadets retained after the ARC interviews.

(2) ARCs forward disenrollment recommendations to the Dean of the Faculty. The Dean of the Faculty can retain the cadet or forward the ARC's disenroll recommendation to the Superintendent for final disposition. If the Superintendent's decision is to disenroll the cadet, the Staff Judge Advocate (JA) sends notification letters to cadets

5-8. DISENROLLMENT PROCEDURES

a. Disenrollment of Cadets. Deficient cadets are processed for discharge or disenrollment in accordance with the provisions of AFI 36-2020.

b. Notification Procedures. JA notifies cadets of final disenrollment decisions. Disenrolled first- and second-class cadets will also be notified about decisions concerning their active duty commitments. JA counsels all disenrollees of their rights and options.

c. Legal Reexamination. Title 10, U.S.C. 9351. Any disenrolled cadet who is deficient because of failure to pass a required examination or course equivalent in any one subject is entitled to a reexamination of equal scope and difficulty in that subject, provided both the cadet's semester and cumulative GPAs are greater than or equal to 2.00 for all courses exclusive of the one failed. The cadet must apply in writing to Student Academic Affairs, Curriculum and Academic Affairs Division (DFRC).

(1) Notification. Student Academic Affairs notifies eligible cadets in writing. The notification letters include all pertinent information regarding the entitlement to reexamination.

(2) Cadet Acknowledgment. Cadets entitled to a reexamination must be counseled by the ARC coordinator concerning their Title 10 rights. Cadets will designate in writing their intent to take the reexamination. The written notification is due no later than ten days after receipt of the official written notification of disenrollment. Cadets electing reexamination will not out-process, but will be removed from the Cadet Wing until the results of the reexaminations are known. The department offering the failed course prepares, administers, and grades the reexamination within five duty days of their notification of the request. The five duty days do not include weekend days, federal holidays, periods of authorized emergency leave, or days the cadet is admitted as an inpatient in a hospital. Cadets awaiting reexamination will not be sent TDY. The re-exam will be of comparable scope and difficulty to the final examination in the failed course. Departments notify DFRC in writing of the cadet's grade for placement in the cadet's official records.

(3) The department administering the reexamination endorses the cadet acknowledgment letter, annotating the date, time, and location of the reexamination.

(4) Cadets prepare for reexamination primarily through individual study. They will not be allowed to attend regularly scheduled classes in the course in which they are retesting.

(5) When cadets are disenrolled at the end of fall semester or at the end of the summer term, they will attend all academic and military formations while awaiting reexamination.

(6) When cadets are disenrolled at the end of spring semester, they retest in lieu of leave.

(7) A cadet who successfully passes a reexamination is formally readmitted to the Cadet Wing. The failed course must be repeated the following offering term. (See USAFA Instruction 36-3523).

(8) A cadet who fails a reexamination is not authorized a second reexamination. The

case will be forwarded for final disposition in accordance with AFI 36-2020.

d. Readmission of Former Cadets Program (USAFAI 36-2005). Cadets disenrolled academically must attend another four-year accredited university in order to qualify for readmission. If they improve their grades and take courses that may transfer to USAFA, they may be eligible to apply for readmission under the Readmission of Former Cadets Program. The program requires interested students to again secure an Academy appointment and again complete the entire application process.

5-9. CLASS ATTENDANCE BY CADETS RECOMMENDED FOR DISENROLLMENT

a. Class Attendance by Cadets Recommended for Disenrollment. Cadets recommended for disenrollment after the fall or summer semester will be placed into classes in a provisional status. Cadets recommended for disenrollment after the spring semester will be removed from first period summer academics, military training, and leave and be placed in Mission Support Group. Cadets will remain in this status until their cases have been resolved.

(1) A disenrolled cadet is immediately withdrawn from classes and begins out-processing.

(2) A retained cadet is removed from provisional status and readmitted to the Cadet Wing.

b. Resigning Cadets. Cadets who plan to resign at the end of a semester and elect to take final examinations will receive letter grades and may be disenrolled for academic deficiency in lieu of voluntary resignation if they are deficient in studies at the final grade report. In order to avoid the possibility of academic disenrollment, a cadet must resign and be officially removed from all classes prior to the start of finals. The Director of Cadet Personnel and Administration (DPY) and DFRC will agree upon and publish the latest date a cadet may resign and still be excused from final examinations. Cadets resigning after Lesson T20, but before final examinations, will receive grades of WP or WF, as appropriate.

5-10. WHY SHOULD CADETS WORRY ABOUT ACADEMIC DISENROLLMENT?

a. First- and second-class cadets disenrolled from the Academy have an active duty service obligation. It is rare for this obligation to be waived.

b. Academic disenrollment seriously affects a student's chances of enrolling in another university, even on a probationary status. Many universities require a petition for entry and allow only one semester to correct deficiencies.

c. Academically disenrolled cadets desiring readmission into the Academy must go through the same admission procedure as new appointees and again secure an appointment. Readmission is not assured.

5-11. WHAT CAN A CADET DO TO PREVENT ACADEMIC PROBLEMS?

a. Take responsibility for her/his academic program.

b. Create a long-term plan for academic success by setting realistic, attainable goals.

c. Take advantage of all the help that is available, including EI, the Student Academic Services Center (the Writing Center, the Academic Success and Reading Enhancement programs, and the intercollegiate study hall), and the Cadet Counseling and Leadership Development Center.

d. Consult his/her squadron academic officer, advisor, advisor-in-charge (AIC), course instructors, and DFRC Academic Review Committee Coordinators.

e. Approach his/her scholarship to USAFA with an understanding that academic, athletic, and military performance are of equal importance to one's success at the Academy.

f. Strive for **EXCELLENCE** in academics. It is a core value that applies to all mission areas.

Figure 5-1a

CADET ACADEMIC DEFICIENCY EVALUATION AND PROBATION ACTION PLAN

THIS FORM IS SUBJECT TO THE PRIVACY ACT OF 1974

(See page 4 for instructions and reference USAFAI 36-3523 and the Curriculum Handbook)

AUTHORITY: Title 10 U.S.C., Sections 8013 and 133; E.O. 9397
PRINCIPLE PURPOSE: Used for identification purposes.
ROUTINE USE: None.
DISCLOSURE IS VOLUNTARY: However, if information is not provided, waiver may not be processed.

CADET NAME *(Last, First, MI)*	CLASS YEAR	SQUADRON	MAJOR

X	CORE GPA	SEMESTER GPA	CUMULATIVE GPA	MAJORS GPA
☐ Midsemester				
☐ End-of-Semester				

1. CADET'S EVALUATION *(Why are you having trouble achieving excellence in academics?)*

2. STATEMENT *(Provide a statement as to why academics are important to officership and why you are motivated to achieve excellence in academics.)*

3. CADET ACADEMIC OFFICER STATEMENT *(Why has this cadet failed to achieve excellence in academics? How can you lead them towards academic success?)*

USAFA FORM 68, 2011XXXX PREVIOUS EDITION IS OBSOLETE
DRAFT - Not for Implementation

COPY DISTRIBUTION: Original - Academic Advisor, Copies - AOC/CADO and Cadet

Page 1 of 4

4. ACTION PLAN *(Get well plan. Help from CADO/AOC/Academic Advisor)*

4a. PROBATIONARY ACTION PLAN *(How will you begin to achieve excellence in academics?)*

4b. WEEKEND ACADEMIC CALL TO QUARTERS *(The CADO must ensure assignment and successful weekly completion of WACQs.)*

1 WACQ + _____ ("C-" Grades)+ _____ ("D" Grades)+_____ ("F Grades) x 7 = _____ TOTAL WACQs

One WACQ equals 60 minutes of study. Assign 1 automatic WACQ plus 1 WACQ per "C-" grade, plus 2 WACQs per "D" grade and 3 WACQs per "F" grade for 7 weeks. A maximum of 15 WACQs may be assigned per weekend. 1st degree cadets are exempt from serving WACQs.

CADET NAME AND RANK	CADET SIGNATURE	SQUADRON	DUTY PHONE	DATE
CADO NAME AND RANK	CADO SIGNATURE	SQUADRON	DUTY PHONE	DATE

5. RECOMMENDATIONS/COMMENTS

X	5a. CONSULTATIONS	ONE TIME	WEEKLY # of Meetings per Week	MONTHLY # of Meetings per Month	EXTRA INSTRUCTION (EI) COURSES	ONE TIME	WEEKLY # of Meetings per Week	MONTHLY # of Meetings per Month
☐	ARC Chair	☐				☐		
☐	ARC Coordinator	☐				☐		
☐	AOC	☐				☐		
☐	Academic Advisor	☐				☐		
☐	CADO	☐				☐		
☐	Flight Commander	☐				☐		
☐	Element Leader	☐				☐		
☐	Evening Tutor Center	☐				☐		
☐	Study Skills	☐				☐		
☐	Writing Center	☐				☐		
☐	Peak Performance Center	☐				☐		
☐	Medical Clinic / PCM	☐				☐		
☐	Intercollegiate / Activity Officer Representative (OR)	☐				☐		
☐	Other *(Specify)*	☐				☐		

5b. ACADEMIC ADVISOR ☐ CONCUR ☐ NONCONCUR ☐ RETAIN ☐ DISENROLL

ACADEMIC ADVISOR NAME AND RANK	ACADEMIC ADVISOR SIGNATURE	OFFICE SYMBOL	DUTY PHONE	DATE

5c. AOC COMMENTS/EVALUATION

AOC NAME AND RANK	AOC SIGNATURE	SQUADRON	DUTY PHONE	DATE

6. STATEMENT OF UNDERSTANDING

"I, CADET _____, AGREE TO FOLLOW THE PROGRAM LAID OUT BY ACADEMIC STAFF. I HAVE READ AND UNDERSTOOD THEIR GUIDANCE AND AGREE TO UPHOLD AND ABIDE TO THE TERMS SET FORTH BEFORE ME. I WILL TAKE RESPONSIBILITY FOR MY ACADEMICS ACCORDINGLY."

CADET NAME AND RANK	CADET SIGNATURE	SQUADRON	DUTY PHONE	DATE

Figure 5-1b
INSTRUCTIONS FOR COMPLETING THE USAFA FORM 68

PURPOSE. Academic probation is a step towards disenrollment from the United States Air Force Academy governed by USAFAI 36-3523. Additional guidance is provided in the Curriculum Handbook. The Academic Review Committee reviews all cadets on academic probation and votes to retain or disenroll cadets as an extension of the Academy Board. All cadets on academic probation must complete a new USAFA Form 68 every time they are placed onto academic probation. Cadets on academic probation have the primary responsibility for completing this form in a timely manner and should be held accountable by Cadet Element/Flight/Squadron leaders, Academic Advisors, and ultimately AOCs for completing the Form 68 and fulfilling the obligations of the probationary Action Plan.

Cadets on academic probation fill out their name, class year, squadron, and their academic major. They also place an X in the appropriate box that indicates if the form is being filled out for mid-semester or end-of-semester academic performance. Probationary cadets then fill in their Core, Semester, Cumulative, and Major's GPAs in the appropriate fields. The USAFA Form 68 is an electronic form and should be filled out, routed, coordinated, and filed electronically. Completed paper copies are required as part of the appeal package if cadets are appealing an ARC decision. Email completed USAFA Forms 68 to the appropriate ARC coordinator for your class.

1. CADET'S EVALUATION: Probationary cadets complete this field. Clearly identify the behaviors, attitudes, and distractions that are causing academic failures. Probationary cadets should look back on their course grade reports and specifically identify whether they scored low on tests, homework, quizzes, labs, papers, or all the above. Probationary cadets should consider comments made by their instructors when appropriate. Only through deep reflection and clear understanding of the causes of failure can probationary cadets begin to develop a successful action plan. Every reviewer should scrutinize the cadet's evaluation, ensure proper depth of reflection, and be able to clearly understand the key factors that led to academic failure. Probationary cadets may be required to revise this evaluation after receiving guidance from CADOs, Advisors, AOCs, and Academic Review Committee members. Cadets should reflect on activities and challenges such as clubs, teams, responsibilities, social habits, relevant medical issues, personal issues, family, fears, lack of self confidence, test anxiety, insomnia, depression, relationship problems, lack of motivation, lack of personal goals, lack of will power, lack of self-discipline, video games, virtual/social media, and other factors that could degrade academic excellence.

2. STATEMENT: Probationary cadets provide a statement as to why academics are important to officership and why they are motivated to make significant behavior and attitude changes towards academics that lead to achieving academic excellence. Intrinsic and extrinsic motivators should be considered and discussed with the cadet's CADO, Academic Advisor, and AOC. Probationary cadets may be required to revise this statement of motivation after receiving guidance and mentoring from their leaders.

3. CADET ACADEMIC OFFICER STATEMENT: Cadet Academic Officers are the first line mentors for academic probation. They should meet with squadron leadership routinely to discuss cadet academic performance and weekly to review academic performance by those cadets on academic probation. CADOs are required to meet with every cadet in their squadron that is on academic probation, review the Cadet's Evaluation and Statement of Motivation to help determine key factors for academic failure and motivation for achieving excellence, and complete the Cadet Academic Officer Statement. Why has this cadet failed to achieve excellence and how can you lead them towards academic success?

4a. PROBATIONARY ACTION PLAN: The probationary cadet and CADO are required to complete the Action Plan. The Action Plan must address the key factors that led to the probationary cadet's academic failures as revealed in the Cadet's Evaluation. For example, if the Cadet's evaluation reveals that he/she is afraid to ask for help because they have always been able to succeed on their own…then the Action Plan should include how the cadet will schedule EI at least once per week with every instructor regardless if the cadet "thinks/feels" he/she needs EI or not. In this example, the "fear" is mitigated by process. The expectation in this example would then be for cadet leadership to hold the probationary cadet accountable for attending EI with every instructor once per week. In this example the probationary cadet, CADO, academic advisor, and AOC should also ensure the EI requirements are reflected in 6a, Consultations. The following questions may help: What do you plan to do differently this semester to succeed academically? What resources do you plan to use? What study habits do you plan to improve? What lifestyle changes are you making to better accommodate your academic responsibilities?

4b. WEEKEND ACADEMIC CALL TO QUARTERS. The CADO must ensure assignment and successful completion of WACQs. One WACQ is 60 minutes of supervised study. CADOs are responsible for ensuring WACQs are supervised and completed weekly. WACQs are traditionally accomplished during the weekends and are associated with weekend restrictions. However, a WACQ credit may be earned during the week for every 60 minutes of documented EI or consultation attended by the probationary cadet that is beyond what the Form 68 requires. For example, if a probationary cadet's Form 68 requires he/she attend EI in Chemistry one hour per week, and this week the cadet attended two documented hours of EI in chemistry, then they would have earned 1 WACQ during the week. WACQs must be validated by CADOs weekly. CADOs may incentivize proactive learning with AOC approval by adjusting weekend sign-out procedures once all WACQs are faithfully served.

5. RECOMMENDATIONS/COMMENTS: Academic Advisors and AOCs are required to review the entire USAFA Form 68 and provide statements in section 5.
a. CONSULTATIONS: The Academic Advisor should review the USAFA Form 68 and appropriately mark the necessary consultations and frequency that best support the probationary cadet's Action Plan. These consultations are obligations, not just recommendations. Therefore, Academic Advisors should ensure the probationary cadet fully understands the frequency of the consultations and the expectations of what is to occur during the consultations.
b. ACADEMIC ADVISOR: Academic Advisors should review the USAFA Form 68 for depth and precision, meet with probationary cadets as required, and either concur or non-concur with the Action Plan. The Academic Advisor should then make statements to support their concurrence or non-concurrence. If non-concur is marked, then the expectation is the probationary cadet will need to revise the form until concurrence is achieved. Once Concurrence is achieved, the Academic Advisor checks the block for Retain or Disenroll and revises/finalizes statements to support the indicated position. Academic Advisors may mark Nonconcur and Disenroll without requiring the probationary cadet to revise the Evaluation, Statement, or Action Plan. Be sure to indentify significant academic program changes administered as a result of the cadet's academic probation status or as part of the cadet's Action Plan.
c. AOC COMMENTS/EVALUATION: AOCs should review the entire USAFA Form 68 and provide her/his comments and evaluations of the probationary cadet's previous performance, action plan, and support/non-support from squadron leadership. AOCs provide USAFA Forms O-299 to the ARC for appeal interviews. The same documentation may appear on both USAFA Forms 68 and O-299.

6. STATEMENT OF UNDERSTANDING: Probationary cadets must sign the statement of understanding. While the USAFA Form 68 may not be a legally-binding contract, executing all the intentions and statements on the form are a measure of a cadet's character. Probationary cadets should be held accountable by their cadet leadership for following through with the commitments discussed on the form.

7. ACTION PLAN DEADLINE DATES. Email/submit a fully coordinated form to your AOC, Advisor, and CADO within the below timelines. Allow time for multiple revisions and consultations with the reviewers. CADOs should ensure all probationary cadets complete Action Plans on time.
(1) Midsemester: Within 10 days of the date DFR makes grades available to cadets.
(2) End-of-Semester: Within 10 days of the beginning of the next semester. Cadets placed on probation at the end of the spring semester must complete the form within 10 days of starting the next fall semester.
(3) End-of-semester ARC Appeal: Cadets recommended for disenrollment at the ARC Records Review will attend a mandatory appellate rights briefing that will provide a date (within 5 days) that appeals packages are due. This form is a critical component to the ARC appeal package. Get started right away if you think you may be disenrolled at the ARC records review.

CHAPTER 6

SPECIAL PROGRAMS

6-1. CADET SEMESTER EXCHANGE ABROAD PROGRAM (CSEAP). . The Air Force Academy creates and maintains semester-long, reciprocal, one-for-one exchange programs with several international military academies. Current exchanges exist with Canada, Chile, France, Germany, Japan and Spain. These exchanges occur during the fall and/or spring semester of the first or second-class year. Visiting international exchange cadets to USAFA do not normally take final exams and receive pass/fail grades or letter grades depending on their home academy requirements. The program is grounded in Air Force Instruction (AFI) 16-109 requirements, established by AFI 16-111, and administered at USAFA in accordance with USAFAI 16-101. IAW USAFA 16-101, the International Programs Council oversees all USAFA international programs, and DFF/DFIP administers them. The strategic purpose of the program is to strengthen USAFA cadet foreign language skills and bolster cross-cultural understanding and interoperability between the US and allied air forces to meet DoD and AF objectives.

a. Candidate Selection. Cadets interested in semester exchange or study abroad are encouraged to work with academic advisors as early as their first year at USAFA. Cadets should plan their coursework to accommodate a semester to study at a foreign institution. Second-class cadets with a minimum 2.60 cumulative GPA, who will have completed the appropriate Foreign Language 322, or equivalent, by the time of departure are eligible to apply. Cumulative MPA and PEA scores of 2.60 or better are also expected. Waivers to these criteria may be granted by CWV or ADP. Program participants may not be on any probationary status at the time of travel. A cadet who is on probation at the time when applications are submitted may only apply with squadron AOC approval. It is advantageous for applicants to complete as many core courses as possible prior to travel and this will be considered during competitive selection. Eligible cadets should apply through the Office of International Programs (DFIP) in the fall of the second-class year or earlier as denoted by a specific exchange program. DFIP will ensure notification to the Cadet Wing of the application calendar.

b. Preparation. Cadets selected as primary or alternate candidates for semester overseas programs must be available all three summer periods prior to their study abroad semester and could be required to take an academic course without leave. Cadets must complete academic coursework as necessary to satisfy all graduation requirements. Cadets must coordinate with their academic advisors and ADP to develop a plan specifying which classes they expect to receive credit for while studying abroad. DFIP will provide course catalogs or equivalent for each program. For selected foreign military academies, the tables in this section provide recent curriculum and credit transfer information. Unfortunately, due to the structure and curricula of our partner academies in Canada and Japan, matrices for their current educational programs are not available. These course offerings and credit transfers are not guaranteed. Academic advisor will need to work closely with the cadet, DFIP, and any departments involved in the cadet's credit transfer plan to ensure all major, elective, and core requirements will be satisfied before graduation.

c. Transfer Credit. Course credit transfer may be awarded to meet major's requirements, Foreign Area Studies electives (for non-FAS majors), and core equivalents. USAFA cadets will receive pass/fail grades for their foreign coursework. Cadets considering participation in CSEAP or CSSAP (see paragraph 6-2) should work with their advisor, ADP, and DFIP to carefully plan and manage their academic program before, during and after their intended semester of participation. Within the spirit of the program's purpose, this planning should maximize the opportunities for foreign coursework to transfer toward their academic major's requirements and FAS courses. The following process should be used by all cadets and advisors planning to participate in CSEAP/CSSAP:

(1) As soon as possible, but no later than lesson 15 of the semester prior to CSEAP/CSSAP participation, the cadet and advisor shall establish an academic plan that maximizes the opportunities for foreign coursework to transfer toward their academic major's requirements and electives. Each academic major is encouraged to be as flexible as possible in determining how each of these courses may fit into their academic major's requirements and therefore maximize the cadet's ability to receive transfer credit for their time abroad. In addition to the major's classes, any cadet participating in a semester program overseas in a foreign language environment may receive experiential credit for For Lang 495 and For Ar Stu 495. A cadet may typically earn credit for a maximum of 6 courses while abroad, and may request authorization from the Director, DFIP to receive credit for additional courses. The Director will coordinate with the AIC of the cadets' departments in cases for which an exceptional courseload pursued overaseas appearas to justify additional credit.

(2) Credit toward academic major requirements and electives to meet graduation requirements should be the primary undertaking within this maximum course load, but some transfer credit may also be extended toward USAFA core courses on a case-by-case basis as well. Credit to fulfill requirements for USAFA core courses is possible using the following table of core substitutes and constrained by considerations (a) through (h) below:

Cadet can receive transfer credit for the following core substitute	Fulfilling the requirement for one of the following core courses	If the course taken abroad/on exchange contains roughly the following course objectives/content
Bas Sci 401	- Biology 315 (Bas Sci 401BI)	- any course using the content of biology to teach critical thinking and the principles of science and the scientific method
	- Math 300/356/377 (Bas Sci 401MA)	- introductory statistics, probability, hypothesis testing, probability distributions, correlation or regression
Engr 401	- Astro Engr 410 (Engr 401AS)	- history, principles, challenges of space, orbits, spacecraft systems, launch vehicles, re-entry or mission management
	- Aero Engr 315 (Engr 401AE)	- introductory aircraft design, fluid mechanics, airfoil/wing aerodynamics, aircraft performance, or

		stability & control
	- ECE 315 (Engr 401EC)	- introductory electrical or computer engineering principles, signal analysis, electronic system design or evaluation
	- Science & Technology Energy/Systems Option (Engr 401ST)	- the Science and Technology Energy/Systems Option is fulfilled by one of a suite of courses, which vary in their intended course year, but several are 300-level courses (e.g. Aero Engr 241, Chem 335, Comp Sci 453, Engr 311, Geo 310, Mech Engr 312, Meteor 320, Ops Rsch 310, Physics 421, or Sys Engr 310)
Soc Sci 401	- Beh Sci 310 (Soc Sci 401BS)	- leadership development through academic study of principles and applied exercises
	- Mgt 400 (Soc Sci 401MG)	- successful techniques in allowing people to understand & influence their environment, models & processes, interrelationships of power, or techniques contributing to decision making in complex, uncertain situations
	- Soc Sci 412 (Soc Sci 401SS)	- principles of the global environment, international relations, comparative politics, gender roles, culture and physical processes, or the influences on global or national politics
Hum 401	- Philos 310 (Hum 401PH)	- study of major moral theories, application to moral problems, ethical action, understanding of civic, cultural & international contexts or influential normative theories of ethics, devotes substantial in-class treatment to the just-war tradition with associated reading assignments and homework
	- MSS 415/416 (Hum 401MS)	- basic defense structure, roles, and missions of other Military Services, the combatant command structure, and the nature of military power and joint warfare
	- English 411 (Hum 401EN)	- moral & intellectual aspects of war as expressed in literature, written and oral communications skills, or major canonical works of fiction, memoir and oratory addressing complexities & ethical issues of war/leadership

(a) If a department believes the substance of a particular core equivalent is not wholly met by the CSEAP/CSSAP course offering, departments and advisors are encouraged to work with cadets to develop acceptable alternatives aligned with the desired outcome. For instance, a department may work with the cadet and an instructor to create additional independent coursework, and/or deliverable materials that may be completed during the CSSAP semester and either submitted or presented upon the cadet's return (or via networked means while abroad). Additional

requirements should be the exception, not the rule, and such coursework should be scheduled during the program, not after a cadet's return to USAFA. Departments will make DFIP aware of additional coursework assigned to meet a requirement. This may supplement a CSEAP or CSSAP offering, e.g. further coursework in a particular arena to meet the intended core requirement, or may take the form of a stand-alone independent study course for credit. Equivalency is defined as a suitable substitute for the corresponding USAFA offering within the spirit of the program's overarching purpose—course syllabus and associated learning outcomes need not correspond on a direct one-for-one basis in order to receive credit for a course.

(b) Advisors are responsible to work with departments to coordinate approval for credit within the major or minor discipline. DFF/DFIP, working with DFR, will coordinate with departments to effect transfer credit for core courses. This will occur prior to cadets' departures on CSEAP/CSSAP. Approval for core equivalency credit will be granted only by the Department Head (or designated alternate).

(c) The cadet and advisor should prepare a list of all desired core course equivalent credits to include the USAFA Core Course and the associated foreign course description to DFIP for consolidated review of the request. The expectation is that credit will be sought for no more than two core courses during a given program. In coordination with DFIP, each department will approve or deny transfer credit requests prior to cadets' departures on CSEAP/CSSAP.

(d) Within one week of beginning academic coursework at the foreign military academy or civilian institution, each cadet must contact DFIP to update and/or refine their academic plan for the semester. Frequently, anticipated courses are not offered each term, and DFIP will work with the advisor and the cadet to adjust the plan based on circumstances. Potential transfer credit from any additional departments will be coordinated within two weeks of notification.

(e) DFIP will maintain records of foreign coursework to include country, location, institution, course titles and descriptions.

(f) Upon receiving proper coordination/approval for transfer credit for USAFA courses AND successfully completing equivalent foreign coursework, major's courses, FAS courses, core course, or *core substitute* will appear on the cadet's transcript for pass/fail credit.

(g) Due to curriculum changes and internal scheduling processes at foreign institutions, course availability cannot be guaranteed until after cadets report to their respective overseas programs. Therefore, while tables 6.1- 6.4 are helpful to get a perspective of what is available at selected foreign academies, they do not ensure the transfer of credit. Advisors must refer to DFIP resources (to include web-posted course descriptions) during planning to confirm expected course offerings.

(h) In cases of unresolved conflict between departments and advisors regarding equivalent credit, the circumstances will be presented to Director DFIP. Director DFIP will, if necessary, present it to the appropriate Division Chair for a final decision on divisional core substitute credit.

6-2. CADET SEMESTER STUDY ABROAD PROGRAM (CSSAP). The Air Force Academy has semester-long study abroad programs at foreign civilian universities for cadets studying in each of the eight languages taught at DFF: Arabic, Chinese, French, German, Japanese, Portuguese, Russian, and Spanish. This program was established in accordance with the Office of the Secretary of Defense's 2005 Defense Language Transformation Roadmap to "exploit study abroad opportunities to facilitate language acquisition" (required actions 1.Q.). Its purpose is to strengthen USAFA cadets' foreign language skills, increase cultural awareness and enhance their ability to operate effectively in cross-cultural environments. The CSSAP program is administered at USAFA in accordance with USAFAI 16-101. This program was originally designed for Foreign Area Studies majors. Cadets from other disciplines may participate, provided that their advisors, working in concert with other departments and DFF/DFIP prior to departure, can establish a plan for meeting all graduation requirements. For program specifics and instructions refer to paragraph 6-1.

6-3. SERVICE ACADEMY EXCHANGE PROGRAM. (USAFAI 36-2001, Cadet Service Academy Exchange Program). The Air Force Academy has a semester-long exchange program with the U.S. Military Academy at West Point, the U.S. Naval Academy at Annapolis, and the U.S. Coast Guard Academy at New London. Cadets selected for this program during their fourth semester attend the sister academy during the fall of their second-class year. Cadets selected for this program during their fifth semester attend the sister academy during the spring of their second-class year. Academic grades received at sister service academies transfer to USAFA and are included in the cumulative GPA. If end-of-semester grades would result in academic probation status at USAFA, the cadet is placed on academic probation upon return. Interested cadets apply through their Air Officer Commanding (AOC).

6-4. ENGLISH AS A SECOND LANGUAGE (ESL) PROGRAM. (FOI 36-164, Policies and Procedures for Cadets Who Speak English as a Second Language). Academic departments may grant up to double time on quizzes, graded reviews, and final examinations to ESL students as agreed upon by course director, instructor, and student. ESL students must be permitted to use an English or foreign language dictionary. Suitable arrangements must be made between cadets and instructors to schedule quizzes, graded reviews, and final exams. For further information, contact the ESL Program Manager in the Department of English and Fine Arts (DFENG) at 333-3930.

Table 6.1
CHILEAN EXCHANGE TRANSFER CREDIT MATRIX

Cadets may earn credit for a maximum of 6 courses without Director, DFIP approval in accordance with paragraph 6-1.c.(1).

Chilean Academy Courses	USAFA Equivalent Course(s)	Maximum Courses (Semester Hours)
Language Course Enrollment or Experiential Learning	**Spanish 495** Special Topics **For Ar Stu 495** Special Topics	(up to 6 sem hrs)
Core Substitute Coursework	**Bas Ci 401, Engr 401, Soc Sci 401, Hum 401 (see paragraph 6-.1c)**	(3 sem hrs)
Phy Ed: Indep Weights/Running Other sport or exercise	**Phy Ed 477** Independent Exercise	(0.5 sem hr)
Aeronautical Engineering	**Aero Engr 315** Fundamentals of Aeronautics	(3 sem hrs)
Statistical Probability	**Math 300** Introduction to Statistics	(3 sem hrs)
Linear Algebra	**Math 344** Matrices and Differential Equations	(3 sem hrs)
Communications Systems Applications	**ECE 446** Applied Communication Systems	(3 sem hrs)
Economics (taught at the APA)	**Econ 332** Microeconomic Theory I **Econ 495** Special Topics	Choose 1 USAFA course (3 sem hrs)
Project Evaluation (taught at the APA)	**Mgt 495** Special Topics **Ops Rsch 495** Special Topics	Choose 1 USAFA course (3 sem hrs)
Aeronautical History of Chile	**Geo 471** Geography o fAmericas **MSS 495** Special Topics	(3 sem hrs)
Military History or Military Fundamentals	**MSS 415/416** Contemporary Joint Operations	(3 sem hrs)
Military Psychology	**Beh Sci 495** Special Topics	(3 sem hrs)
International Economics	**Econ 450** International Economics **Econ 459** Economics of Latin America	Choose 1 USAFA course (3 sem hrs)
Cost Accounting	**Mgt 341** Financial Accounting	(3 sem hrs)
Law	**Law 495** Special Topics **ForArStu 495** Special Topics	Choose 1 USAFA course (3 sem hrs)
Labor Law	**Law 495** Special Topics **Law 495** Special Topics **Law 340*** (Legal Studies Majors only)	Choose 1 USAFA course (3 sem hrs)
Administration Science	**Mgt 400** Management and Command	Choose 1 USAFA course (3 sem hrs)
Logic and Philosophy of Science	**Philos 330** Intro to the Philosophy of Science **Philos 360** Applied Reasoning	Choose 1 USAFA course (3 sem hrs)
Other academic coursework	Appropriate USAFA Equivalent Credit	(TBD)

USAFA cadets majoring in engineering areas may require special course scheduling at the Aeronautical Polytechnic Academy (APA) while attending the Chilean exchange.

Table 6.2
FRENCH EXCHANGE TRANSFER CREDIT MATRIX

Cadets may earn credit for a maximum of 6 courses without Director, DFIP approval in accordance with paragraph 6-1.c.(1).

French Academy Courses	USAFA Equivalent Course(s)	Maximum Courses (Semester Hours)
Language Course Enrollment or Experiential Learning	**French 495** Special Topics **For Ar Stu 495** Special Topics	(up to 6 sem hrs)
Core Substitute Coursework	**Bas Sci 401, Engr 401, Soc Sci 401, Hum 401** (see paragraph 6-.1c)	(3 sem hrs)
Physical Education	**Phy Ed 477** Independent Exercise	(0.5 sem hr)
Military Strategy	**MSS 415/416** Contemporary Joint Operations	(3 sem hrs)
Astrodynamics	**Astro Engr 410** Introduction to Astronautics	(3 sem hrs)
Aeronautics	**Aero Engr 315** Fundamentals of Aeronautics* **Aero Engr 341** Aero Fluid Dynamics **Aero Engr 342** Computational Aerodynamics **Aero Engr 351** Aircraft Perf and Static Stability	(3 sem hrs each)
Aerospace Structures Resistance of Materials	**Engr Mech 495** Elasticity	(3 sem hrs)
Computer Architecture & Flight Control	**Engr 342** Linear Control System Analysis & Design	(3 sem hrs)
Organizational Management	**Mgt 400** Management and Command	(3 sem hrs)
European Politics and International Relations	**Soc Sci 412** Geopolitics	(3 sem hrs each)
Economy and Finance	**Econ 301** Macroeconomics **Econ 351** Comparative Economic Systems **Econ 473** Public Finance **Soc Sci 412** Geopolitics	(3 sem hrs)
Other academic coursework	**Appropriate USAFA Equivalent Credit**	(TBD)

*** Recommended that cadets take this course prior to their exchange due to the higher level of math involved.**

Table 6.3
GERMAN EXCHANGE TRANSFER CREDIT MATRIX

Cadets may earn credit for a maximum of 6 courses without Director, DFIP approval in accordance with paragraph 6-1.c.(1).

German Academy Courses	USAFA Equivalent Course(s)	Maximum Courses (Semester Hours)
Language Course Enrollment or Experiential Learning	**German** 495 Special Topics **For Ar Stu 495** Special Topics	(up to 6 sem hrs)
Core Substitute Coursework	**Bas Sci 401, Engr 401, Soc Sci 401, Hum** 401 (see paragraph 6-.1c)	(3 sem hrs each)
Physical Education: Organized sport or exercise	**Phy Ed 477** Indpendent Exercise	(0.5 sem hrs)
Leadership Theory and Methods	**Beh Sci 310** Foundations for Leadership and Character	(3 sem hrs)
Military History	**MSS 415/416** Contemporary Joint Operations	(3 sem hrs)
Politics and History	**Pol Sci 471** Politics of Europe	(3 sem hrs)
Other academic coursework	Appropriate USAFA Equivalent Credit	(TBD)

Table 6.4
SPANISH EXCHANGE TRANSFER CREDIT MATRIX

Cadets may earn credit for a maximum of 6 courses without Director, DFIP approval in accordance with paragraph 6-1.c.(1).

Spanish Academy Courses	USAFA Equivalent Course(s)	Maximum Transferable Courses (Semester Hours) Allowed
Language course Enrollment or Experiential Learning	**Spanish 495** Special Topics For Ar Stu 495 Special Topics	(up to 6 sem hrs)
Core Substitute Coursework	**Bas Sci 401, Engr 401, Soc Sci 401, Hum** 401 (see paragraph 6-.1c)	(3 sem hrs each)
Physical Education: Organized sport or exercise	**Phy Ed 477** Indpendent Exercise	(0.5 sem hrs)
Aerodynamics/Principles of Flight	**Aero 315** Fundamentals of Aeronautics	(3 sem hrs)
Engines & Rockets	**Astro Engr 436** Small Spacecraft Engineering I	(3 sem hrs)
Physiology & Flight Safety	**Biology 345** Aerospace Physiology	(*only 2 sem hrs*)
Applied Computer Science	**Comp Sci 495** Special Topics in Comp Sci	(3 sem hrs)
Electronics I	**ECE 315** Principles of AF Electronic Systems	(3 sem hrs)
Applied Electronics & Applied Electronics II	**ECE 343** Electromagnetics	(3 sem hrs)
Mechanics & Thermodynamics	Energy Systems Core Option	(3 sem hrs)
Human & Physical Geography	**Geo 250** Human Geography **Geo 351** Intro to Physical Geography	(*6 sem hrs*)
Graphic Expression Techniques	**Geo 382** Remote Sensing and Imagery Analysis **Geo 495** Special Topics in Geography	(3 sem hrs)
Social Psychology	**Beh Sci 352** Social Psychology	(3 sem hrs)
Social Investigation Techniques	**Beh Sci 231** Basic Research Methods & Stat Tools	(3 sem hrs)
Military Sociology	**Beh Sci 360** Sociology	(3 sem hrs)
Political Economics	**Econ 355** Macroeconomics	(3 sem hrs)
Economic Development	**Econ 454** Economics of Development & Conflict	(3 sem hrs)
Defense Economics	**Econ 495** Special Topics in Economics	(3 sem hrs)
International Relations	**Soc Sci 412** Geopolitics	(3 sem hrs)
Management	**Mgt 400** Management and Command	(3 sem hrs)
Defense Politics	**MSS 415/416** Contemporary Joint Operations **Pol Sci 302** Politics of National Security	(3 sem hrs)
Air Support I / Air Support II	**MSS 365** Developing the Air Force Strategist	(3 sem hrs)
Security and Defense	**Pol Sci 302** Politics of National Security	(3 sem hrs)
Current World Political Events	**Pol Sci 471** Politics of Europe	(3 sem hrs)
Other academic coursework	Appropriate USAFA Equivalent Credit	(TBA)

6-5. ACADEMICALLY AT-RISK PROGRAM. This program is designed to provide academically "at-risk" cadets with a lighter academic load during their fourth-class year to increase their chances for successfully meeting graduation requirements. Cadets may not decline their placement into the program, nor can they volunteer for the program. Cadets may volunteer for the Study Skills 101 course.

a. "At-risk" fourth-class cadets take four academic courses and Study Skills 101 during the fall semester. During the spring semester, at-risk cadets will take five academic courses. Cadets in one or more of the categories listed below may be placed in the program:

(1) Verbal Waiver (ACT < 24 or SAT < 580)

(2) Math Waiver (ACT < 25 or SAT < 560)

(3) PAR (Prior Academic Record) < 400

(4) Academic Composite < 2800

b. Procedures

(1) DFRC provides AOCs, AAOCAs, and the Student Academic Services Center with a list of academically at-risk cadets.

(2) Academically at-risk cadets are identified on the APS by enrollment in Study Skills 101 in the fourth-class fall (refer to Chapter 12, Course Descriptions, under Learning Skills).

(3) An academically at-risk cadet who wishes to take more than five academic courses in the fourth-class spring semester may do so if he/she qualifies for an overload (3.00 or greater fall GPA). At mid-semester, the ARC may direct any overloaded, deficient cadet to drop a course.

(4) An academically at-risk cadet who fails a course during the academic year may be directed to forfeit leave in the summer and take an academic course.

NOTE: According to USAFAI 36-155, Cadet Extracurricular Activities Program, academically at-risk cadets may not participate in any clubs but may participate in one varsity sport during the fall semester. They may participate in the spring semester with a GPA of 2.25 or better.

6-6. HOSPITAL INSTRUCTION PROGRAM (HI). (USAFAI 36-3509, Extra Instruction and Hospital Instruction for Cadets). The HI program helps cadets maintain their academic course work at a proficient level while hospitalized. While this program is primarily for cadets who experience an extended stay due to illness or injury, extra instruction services are available for all cadets.

6-7. EXTRA INSTRUCTION PROGRAM (EI). (USAFAI 36-3509, Extra Instruction and Hospital Instruction for Cadets). Extra instruction provides an opportunity for students to meet one-on-one with their instructors to obtain additional, out-of-class assistance in academic areas. Extra instruction is the right of all cadets and is highly encouraged for cadets experiencing academic difficulty. All instructors are willing to help any cadet in need of additional academic assistance.

6-8. ACADEMY SCHOLARS PROGRAM. The Academy Scholars Program helps academically talented cadets to reach their full potential by offering a unique and challenging path through the curriculum, thereby providing the Air Force and our nation with a pool of intellectually talented and well-rounded leaders. The curriculum initially consists of special core course sections (core substitutes) that deepen the scholars' intellectual development, primarily in the liberal arts. The pedagogical principle of this enrichment program involves forming small learning communities (a cohort of cadets enrolled in the same sections) to provide close interaction among the same students over a four-year period, in courses pursuing a coherent theme – the development of the Western intellectual tradition. This close interaction, in pursuit of a liberal education, encourages a culture of academic excellence allowing each cadet to develop his or her full intellectual capacity.

a. Background. The Academy Scholars Program addresses several academic issues at USAFA, and several trends in the Air Force, the global security environment, and higher education at the beginning of the 21st century. USAFA's efforts to recruit the best qualified applicants, in addition to the competitiveness of our cadets for graduate scholarships, support a program focused on intellectual development in the Social Sciences and Humanities, mirroring USAFA's excellent programs in the Basic Sciences and Engineering.

b. Admission to the Academy Scholars Program. Approximately 60 of the top academically qualified cadets of each new class (based on their entering academic composite and fall prog GPA) will be identified shortly after their first progress report in the fall. They will be offered the opportunity to volunteer for participation in the program starting their second semester. The goal is to have approximately 45 cadets formally enter the program. Cadets will be allowed to petition for admission to the program after their second semester if there is space available in the program. Cadets who wish to take Academy Scholars courses, but who are not formally in the program, may do so on a space available basis with the approval of the Program Director. A cadet will be considered for removal from the program if his/her GPA drops below 3.5. Additionally, any form of probation (honor, conduct, athletic, or academic) restricts a Scholar to course participation and from complementary opportunities.

c. Academy Scholars Program Curriculum. Scholars start by taking English 211S or Hum 200 in the spring of their fourth-class year. Schedules permitting, scholars will also be scheduled into Scholar sections of History 100, Beh Sci 110, and Pol Sci 211 that same semester. The remaining Scholars sections will be scheduled during the semesters indicated. To graduate as an Academy Scholar, cadets must complete ten Scholars courses; five courses, indicated by an asterisk in the table below, are specific requirements. Scheduling accommodations for specific cadet needs can be made with Department Head and Associate Dean for Student Academic Affairs approval.

d. Recommended Sequence for Academy Scholars Program Courses:

Core Course	Year	Semester
History 100S	4°	Spring
English 211S* or Hum 200*	4°	Spring
Beh Sci 110S	4°	Spring
Pol Sci 211S*	4°	Spring
Econ 201S	3°	Fall
History 300S	3°	Fall
Law 220S	3°	Spring
Philos 310S	2°	Fall
Soc Sci 412S	2°	Fall
English 411S* or Hum 400S**	2° 2°	Spring Fall
MSS 400S	2°	Spring
Capstone Seminar: Statesmanship* Soc Sci 495S	1°	Fall
Major's Capstone Experience*	1°	Spring
* Required Scholars Courses ** Hum 400 for those who completed Hum 200; Hum 400S for others		

6-9. SUMMER PROGRAMS. Academic, airmanship/aviation, and military training core requirements are offered during the summer. Commandant of Cadets summer schedulers coordinate scheduling procedures with DF, 306 FTG, and Athletics (AD). As the single point of contact for all program actions, USAFA/CWTS also notifies cadets of flight and military training summer program registration and changes.

a. Military Training. All cadets will complete two programs per summer. For the two upper classes, one program will be a leadership program. Certain summer military training programs must be completed to meet graduation requirements. Specific requirements will vary by cadet class. General graduation requirements are as follows:

(1) Core military training requirements:

(a) Basic Cadet Training (BCT) student (Basic Trainee)

(b) Expeditionary, Survival, and Evasion Training (ESET) student (Third-Class Student)

(c) Operation Air Force (Ops AF) or equivalent (Air Education Training Command (AETC) Leadership, CE Ops/Civil Engineer Field Engineering Readiness Laboratory (CE-FERL), or AF Special Tactics Orientation (STO) (Second-Class Student)

(2) Leadership Programs: All upper-class cadets will be required to complete one Leadership Cadre program per summer for manning purposes. First-class cadets not chosen for CSRP, CSLIP, OpsAF or OpsAF Deployed, Powered Flight Program, or Academics plus Leave will be required to perform two Leadership Cadre programs. Military Leadership programs are:

(a) Any commander selected from the Command Selection Board

(b) BCT Cadre, ESET Cadre, MSG Staff, and Ops AF Group Staff

(c) AETC Leadership and CE-FERL Leadership

(d) Cadet Aviation Instructor, Soaring Instructor, and Parachuting Instructor

(3) Leadership credit can be earned in many ways with regards to select academic year positions and Cadet-in-Charge positions for various programs (e.g., CSLIP CIC). Although cadets may accumulate numerous leadership credits, that does not excuse them from working Summer Leadership Cadre programs at USAFA.

(4) All cadets are normally assigned three weeks of leave every summer. They may choose to give up leave for a third military training program or an academic class. In order for cadets to participate in two TDY programs during the same summer, those cadets must give up their leave.

(5) The following programs are available to fulfill the additional requirement for two military training programs each summer.

MILITARY LEADERSHIP PROGRAMS:
All Cadet Commanders
Command Center
Cadet Aviation Instructor/Flying Team
BCT Cadre
ESET Cadre
Ops AF Group Staff
CE-FERL Leadership
MSG Staff
Soaring Instructor
Parachuting Instructor
AETC Leadership

CAREER BROADENING PROGRAMS:
Falconry
Media Flight
Honor Flight
EMT Flight
Training Squadron
Student Squadron
Space Ops Center
CE-SAME Camp
Summer Seminar
Sports Camp
Prep School Cadre
BSA Philmont Ranger

JOINT MILITARY TRAINING PROGRAMS:
Marine Bulldog
Army Air Assault
Army Airborne
Navy Programs

DF COORDINATED PROGRAMS:
Summer Research
Internship
Language and Cultural Immersion
Semester Exchange and Semester Study Abroad Programs
Special Projects

AIRMANSHIP/AVIATION PROGRAMS:
Powered Flight Program
Precision Flight Training
Aviation Instructor Training

NOTE 1: Summer Training Review Committee (STRC) – Directed Core Military Training. STRCs can direct core military training in lieu of leave during the summer if deemed appropriate for completing graduation requirements based on circumstances surrounding incompletion of core military training during prescribed summer term.

NOTE 2: All joint military training programs as well as BSA Philmont will have limited enrollment restricted by USAFA based program manning.

NOTE 3: A cadet who successfully completes Basic Freefall Parachuting will not be eligible for Army Airborne. A cadet who successfully completes Army Airborne will not be eligible for Basic Freefall Parachuting.

NOTE 4: Cadets must have medical clearance verified before the first day of class in Armnshp 251. Cadets interested in becoming Soaring Instructors must take Armnshp 251 during the summer or NLT B-block during their 3° fall. Those cadets not interested in becoming Soaring Instructors should consider scheduling Armnshp 251 after B-block.

NOTE 5: Cadets must have medical clearance verified before enrollment in Armnshp 490 (Basic Parachuting).

b. Summer Academics. The purpose of summer academics is to enable cadets to correct a failed grade or deficiency and allow students to achieve personal goals such as completing a major, strengthening weak areas, or preparing for special academic programs. Each fall, the DFRC Summer Academics Program Coordinator develops the next summer's academic schedule. The goal of this program is to include most core courses. Most courses will be open to all interested cadets. Registration for summer academics is during the registration period held in the spring. After the established deadline date, changes to a cadet's summer academic schedule will be reviewed on a case-by-case basis.

(1) Academic Review Committee (ARC) – Directed Summer Academics. ARCs can direct summer academics in lieu of leave if deemed necessary for the cadet to maintain an achievable course load and graduate in 4 years.

(2) Summer Academics plus Leave. This program is designed to serve academically "at risk" third-class cadets or first-class cadets who either perform below average academically but continue to demonstrate the ability to benefit from a service academy education or, to a lesser degree, maintain above average academic performance while contributing extensive time to the Academy community.

NOTE: Academics plus leave slots are limited to specific class years depending on the number of cadets needed to fill core military requirements and will vary from year to year. DFRC selects fourth-class cadets with inputs from academic advisors/AAOCAs. CWT will waive one military training program during the summer for those who receive a summer academics plus leave slot.

(3) Summer Academics in Lieu of Leave. A number of cadets choose to register for summer academics in lieu of leave to ease future course loads or enrich their academic programs. Cadets who wish to drop or add a summer academic course must do so prior to the end of the registration period in the spring. After that date, the only additions or deletions will be ARC actions, CWT changes, or exceptions approved by DFR.

c. Airmanship Programs. Basic Soaring and Basic Parachuting are not available to first- and second-class cadets during the summer. Third-class cadets will be encouraged to participate in either Basic Soaring, Basic Parachuting, Space Orientation, or Basic Unmanned Aerial Systems during the summer unless waived by CWTS due to academics, medical restrictions, or availability. Because of the limited number of student slots available, seats will be filled based on cadet preference weighed against a modified OPA score (40% GPA, 40% MPA, 20% PEA). Third-class cadets who wish to participate in Basic Parachuting must volunteer, weigh less than 215 pounds, and pass a scored Physical Fitness Test (PFT).

6-10. BASIC SOARING (Armnshp 251). Cadets may have the opportunity to participate in the soaring program during the summer following their fourth-class year or during the third-class year. Cadets interested in becoming Soaring Instructors should take Armnshp 251 NLT the fall semester of their third-class year. The limited seats in school year Basic Soaring are reserved for third-class cadets, but upper-class cadets can register for spring Armnshp 251 through their academic advisors in Q2 and will be scheduled for Basic Soaring on a space-available basis.

6-11. BASIC PARACHUTING (Armnshp 490). Cadets may have the opportunity to participate in the parachuting program during the summer following their fourth-class year or during their firstie year. Cadets interested in becoming Parachuting Instructors should take Armnshp 490 NLT the summer before their third-class year. Registration for Basic Parachuting during the school year is open to all upper-class cadets, however the limited number of seats is prioritized by most senior class year first, followed by OPA.

6-12. BASIC CYBER OPERATIONS (Cyber 256). . Cadets have the opportunity to participate in the cyber operations program during the summer following their fourth-class year or during the third-class year. Cadets interested in becoming a Cyber instructor should take Cyber 256

NLT the summer of their third-class year and then enroll into Cyber 476. Cyber 256 is a 10-day program scheduled during the summer,spring, or fall.

6-13. AIRMANSHIP COURSES. Cadets may complete Armnshp and Aviation courses during the academic year. Airmanship courses are generally non-academic courses and do not satisfy requirements for an academic major. Generally, cadets may not upgrade and instruct in more than one airmanship. The 94 FTS, 98 FTS, DFE as applicable, and DFMI must approve exceptions.

a. 98 FTS Parachuting and 94 FTS Soaring Programs (Armnshp Courses): Except for Armnshp 461 (Cadet Soaring Instructor Upgrade) and Armnshp 491 (Jumpmaster/Instructor Training), these courses are non-academic and cannot satisfy requirements for an academic major. If after the registration deadline for the applicable semester, the 306 OSS will coordinate with the appropriate flying training squadron to add or drop airmanship courses. The minimum entry GPA for upgrade and instructor parachuting and soaring courses is 2.6 semester or cumulative GPA, regardless of course load. Cadets will be dropped if placed on academic probation during any progress report. Parachuting and soaring courses do not factor into a cadet's course load; however, they cannot be taken by cadets on academic probation (exception: Armnshp 251, Basic Soaring). If a cadet is placed on academic probation at any progress report, the ARC may remove him or her from parachuting and soaring courses. Cadets enrolled in two airmanship courses must have a 2.6 semester or cumulative GPA. Cadets in Armnshp 251 (Basic Soaring), Armnshp 461 (Cadet Soaring Instructor Upgrade), Armnshp 490 (Basic Parachute Training), and Armnshp 491 (Advanced Parachute/Jumpmaster/Instructor Training) cannot participate in any other airmanship programs during that course.

6-14. GRADUATE SCHOOL OPPORTUNITIES. Cadets may wish to attend graduate school or pursue careers in the biomedical, legal, or other professions after graduating from USAFA. Cadets may compete for the following programs:

a. National Competitive Scholarship Program. Cadets may compete with students from other universities for scholarships and fellowships to study for advanced degrees in the United States and overseas. Among the major scholarships available to cadets are the following: Rhodes Scholarship, Marshall Scholarship, Gates Scholarship, Fulbright Scholarship, Fannie and John Hertz Foundation Fellowship, National Science Foundation Fellowship, John Stark Draper Fellowship at the Massachusetts Institute of Technology (MIT) and Rice University, Harvard University Scholarship at the John F. Kennedy School of Government, East-West Center Fellowship at the University of Hawaii, Program Research and Education in Space Technology (PREST) Fellowship at George Washington University, University of Washington Engineering Fellowship, the University of Maryland Scholarship and the Pardee RAND Graduate School in Santa Monica, CA. Scholarship/Fellowship recipients will incur an active duty service commitment (ADSC). For additional scholarship opportunities, contact the Graduate Studies Programs Office (Room 1A97, x3-4172).

b. Graduate School Program (GSP). This program allows selected graduates of the Air Force Academy to attend a twelve-month master's degree program immediately following

graduation. GSP participants will incur an ADSC.

(1) Number of slots available is determined by the Air Force Educational Resources Board (AFERB). The GSP slots will be used for departments to bring graduates back to teach. A number of slots are reserved for the Dean of the Faculty.

(2) Candidates for this program must be willing to return to the Academy as academic instructors after gaining Air Force experience. Interested cadets should contact their Advisor-in-Charge or the GSP departmental representative to receive further details.

c. Health Professions. Select cadets may be allowed to enter several health related professions after graduation.

(1) *Medicine*: Cadets meeting USAFA's requirements may compete for scholarships to medical, dental, nursing, or physical therapy programs. USAFA can send up to 38 graduates per year to health profession degree and training programs. For medical training, graduates can attend any CONUS medical school, including the Uniformed Services University of the Health Sciences (Bethesda). Graduates attending medical schools are funded through the Health Profession Scholarship Program (HPSP). The HPSP pays for tuition, books and other required expenses, and provides a cost of living stipend. HPSP recipients incur additional commitments to the Air Force.

(2) Cadets interested in any health profession career field or healthcare-related opportunities should contact the Health Professions Advisor in the Department of Biology (DFB). Medical schools do not accept AP or validation credits to fulfill the basic science course requirements. Cadets planning to attend medical or dental school must take one year each of inorganic chemistry, organic chemistry, physics and biology, with a laboratory component.

d. Legal Training. USAFA graduates interested in attending law school may pursue such interest in the following ways:

(1) The Secretary of the Air Force may authorize annually that a graduate of USAFA be placed in unfunded excess leave as a student at an American Bar Association (ABA)-approved law school for a period not to exceed 36 months leading to a Juris Doctor and completion of legal licensing requirements necessary for service as an Air Force Judge Advocate. Eligibility is limited to USAFA cadets in their first-class year, in good standing, who have either (a) a minimum 3.25 legal studies major GPA or (b) a minimum 3.5 majors GPA in another academic specialty accompanied by experience in the Cadet Mock Trial Program. Eligible first-class cadets must submit their application to the Department Head, DFL, between 1 October and 15 January of their first-class year at USAFA. Selection will be on a best-qualified basis, consistent with the needs of the Air Force. The selected applicant begins law school in the fall semester after graduation. Applicants are solely responsible for all application expenses, tuition, fees, associated educational expenses, bar review course fees, and bar examination fees. Applicants are authorized to accept tuition assistance such as

scholarships and endowments.

(2) Graduates, along with other commissioned officers, may also apply for one of the Funded Legal Education Program (FLEP) slots available each year. The number of slots varies from year to year, depending upon the needs of the Air Force. In recent years, the number of slots has been between zero and eight. Those selected by the Judge Advocate General enter law school after two years of commissioned service. Applications must be submitted to the Staff Judge Advocate at the nearest Air Force base between 1 January and 1 March of the calendar year in which the applicant intends to enter law school. Eligibility ends after the sixth year of service. A similar program available to officers who desire to become lawyers is the unfunded Excess Leave Program (ELP). The number of applicants accepted annually varies according to requirements for Judge Advocates.

Officers who complete these programs are normally designated as Judge Advocates and serve in various legal positions in the Air Force. For more information about these programs, contact the Law School Advisor (3-3680).

6-15. SCHOLARSHIP PREPARATION. Suggested courses for scholarship preparation are listed below. Cadets who are considering applying for scholarships or fellowships are encouraged to take the GRE during the spring semester of their second-class year. Cadets desiring additional graduate education information should contact the Graduate Studies Programs Office (3-4172).

a. Suggested Courses for Non-technical Scholarship Preparation:

(1) Core Courses: Schedule before or during fall of first-class year.
Hum 200, Introduction to the Humanities
English 411, Advanced Composition and Public Speaking
Philos 310, Ethics
Hum 400, Humanities Seminar

(2) Electives (Strongly Recommended): Cadets should schedule for fall of first-class year to retain flexibility, should they decide not to compete for scholarships.
Engineering/Humanities/Social Science 400
Econ 374, Survey of International Economics Issues
English 360, Classical Masterpieces
History 457, History of Military Thought
*History 480, Studies in American Civilization
*History 498, Global Dimensions of History
*Hum 430, The Holocaust
Philos 391/2/3/4, Philosophy Option
Pol Sci 301, Political Theory
Pol Sci 302, Politics of National Security
Pol Sci 491, Capstone Seminar in Political Science

(3) Electives (Good Preparation): Second-class year or fall of first-class year.

Beh Sci 352, Social Psychology
Beh Sci 360, Sociology
Econ 351, Comparative Economic Systems
Econ 473, Public Finance
Econ 478, Seminar in Defense Economics
English 343/344, British Literature
Fine Art 358, Music Appreciation
History 320, History of Technology and Warfare
History 394, The American Way of War
History 483, Great Americans
Law 351, U.S. Constitutional Law
Law 461, International Law
Philos 391/2/3/4, Philosophy Option
Philos 401, Comparative Religion
Philos 402, Philosophy of Religion
Philos 495, Seminar in Philosophy
Pol Sci 451, American Political Thought
Pol Sci 460, Comparative Security Policy and Civil-Military Relations
Pol Sci 495, Special Topics in Political Science
Soc Sci 483, Principles of Negotiation and the Mediation Process

*Please check with individual departments to confirm availability of courses.

b. Suggested Courses for Technical Scholarship Preparation:

Math 342, Numerical Analysis
Math 360, Linear Algebra
Math 469, Partial Differential Equations
Math 470, Mathematical Physics
Physics 355, Classical Mechanics

c. Suggested Courses for Non-Engineering Majors Pursuing Engineering School: The following technical/engineering courses should be included in a non-engineering major's course sequence if the cadet has aspirations to pursue an engineering degree in graduate school:

Math 243, Calculus III
Math 253, Advanced Placed Calculus III
Math 245, Differential Equations
Additional mathematics courses, when possible

6-16. BASIC METEOROLOGY PROGRAM (BMP). The BMP is an opportunity for newly accessed officers from any commissioning source (USAFA, OTS, and AFROTC), to pursue a post-baccalaureate program in meteorology, with follow-on inclusion into the weather officer career field (15W). The BMP, managed by the Air Force Institute of Technology (AFIT), is a challenging non-degree program that averages 10-11 months in length.

a. It consists of:

(1) Minimum of 24 semester hours of junior/senior level (possibly some graduate) courses in meteorology, with three semesters of course work in meteorology being the norm (on the order of 36-42 semester credit hours over summer, fall, spring)

(2) Collateral study in mathematics, physics, and computer science may be required

(3) BMP does not count against an individual's total 54-month allotment of AFIT graduate education time

(4) A 3-year ADSC is incurred--served concurrent with any existing ADSC--ADSC clock starts on program completion

(5) In certain cases, a BS in Meteorology may be attainable, assuming university prerequisites and/or requirements are fulfilled either prior to or as part of the BMP program

b. BMP candidates must be commissioned prior to program entry and possess a bachelor's degree in a technical field such as math or physics. Other degrees may be accepted depending on the applicant's math and physics coursework background. Eligibility requirements are determined by AFIT/CIGW. The current standards are as follows:

(1) Typically a 2.8 minimum GPA required, both overall and within a student's major discipline

(2) Minimum prerequisites include one year of calculus-based physics and one year of calculus through integral calculus (generally Calc I, II, III sequence) with minimum grades of "C" in each prerequisite course

(3) A course in Differential Equations is also strongly recommended prior to program entry or else it will need to be taken as part of the BMP

(4) Exceptions may be possible on a case-by-case basis--approved by AFIT/CIGW

c. Interested cadets should consult with the USAFA Meteorology Advisor-In-Charge (AIC) or alternate AIC to inquire about the BMP, the USAF Weather Career Field, or to enroll in potentially helpful USAFA meteorology courses (e.g., Academy or Major's Options) in preparation for BMP.

SECTION II

CHAPTER 7

CORE COURSES

7-1. ACADEMIC CORE CURRICULUM The USAFA academic core curriculum consists of 32 three semester hour core courses, and five semester hours of physical education courses for a total of 101 semester hours of core. The courses form an intentional, coherent whole which is organized developmentally to promote learning and growth in three main content areas: Culture and Global Awareness, Leadership and Human Behavior, and Science and Technology.

The core courses form an intentional, coherent whole which is organized developmentally to promote learning and growth in the 21 Responsibility, Skills, and Knowledge Outcomes (see Table 7-1) and the three main content areas: Culture and Global Awareness, Leadership and Human Behavior, and Science and Technology (see Diagram 7-1). The 32 academic core courses consist of 29 common core courses and 3 tailored core courses (2 Foreign Language courses and one Science and Technology Energy/Systems option). The 32 core courses are organized developmentally by the class year in which they are to be taken, as follows:

	4° Year	3° Year	2° Year	1° Year
	Beh Sci 110	Chem 200	Aero Engr 315	Astro Engr 410
	Chem 100	Econ 201	Beh Sci 310	English 411
	Comp Sci 110	Engr Mech 220	Biology 315	Mgt 400
	Engr 101	English 211	ECE 315	MSS 415/416
Courses	English 111	Law 220	History 300	Soc Sci 412
	For Lang 1	MSS 200	Math 300 or Sub	
	For Lang 2	Physics 215	Philos 310	
	History 100	Pol Sci 211	En/Sys Option	
	Math 141			
	Math 142/152			
	Physics 110			

Core courses should be taken in their intended class year. Major's sequences should be designed to facilitate this, subject to required programmatic constraints. The flexibility in this curriculum should come from the major's sequencing rather than from core sequencing. Accommodations for specific cadet needs can be made with Department Head and Associate Dean for Student Academic Affairs approval.

7-2. CORE COURSES All cadets must complete mandatory courses referred to as the core. Core courses form the foundation around which all majors are built. Cadets are required to take 96 semester hours of DF academic core courses, in addition to 5 semester hours of Physical Education. Core courses are intended to be taken in the year as indicated by their designator (e.g., 100-level core should be completed during the fourth-class year, 400-level core should be completed during the first-class year).

Diagram 7-1

Core Curriculum: Organization and Sequencing by Content Area and Class Year

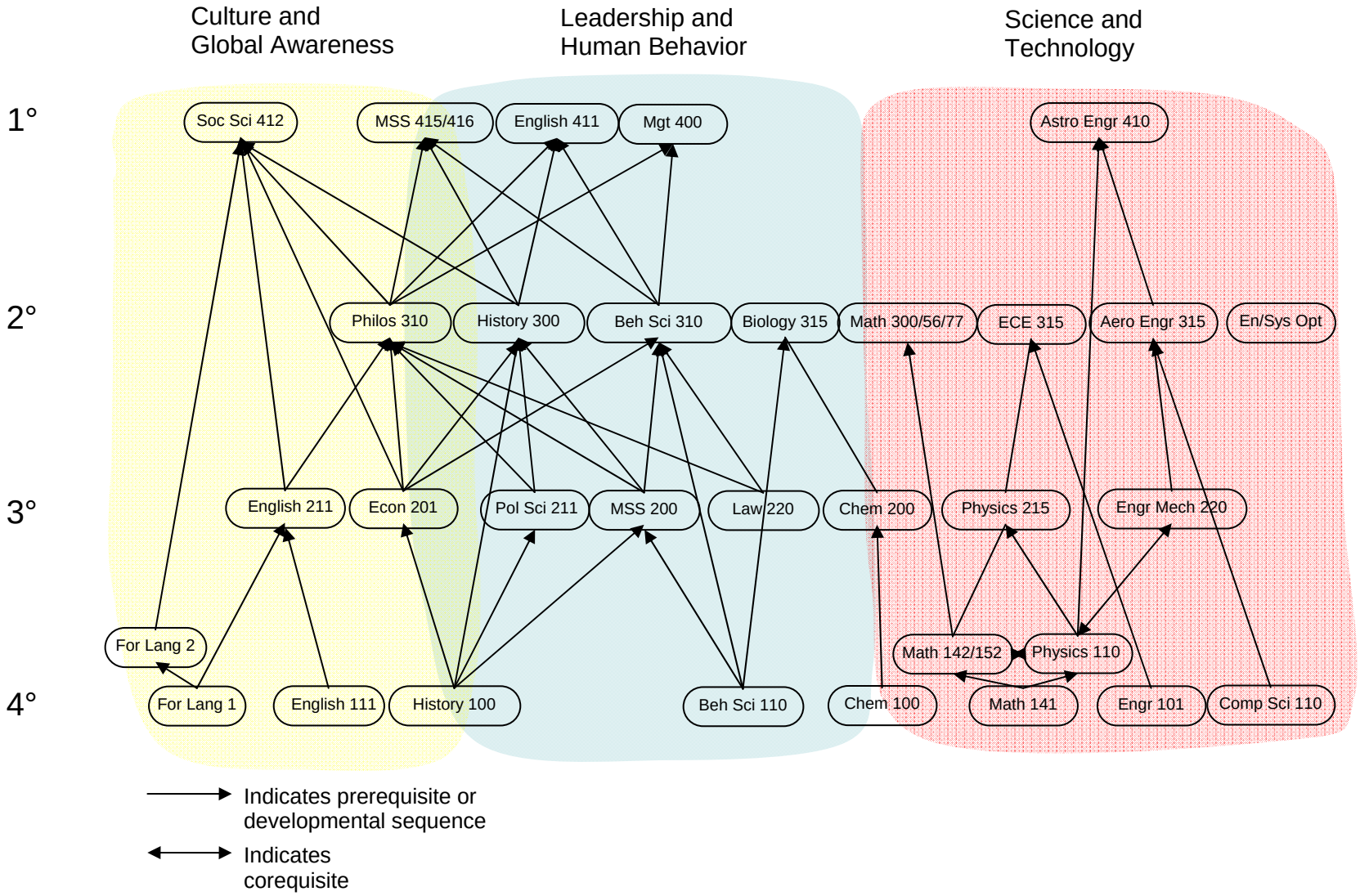

7-3. CORE REQUIREMENTS Below is a listing of core requirements by division. Cadets who fail a substitute core course may not repeat the course, but must take the original core course.

DIVISION	COURSE DESIGNATOR	SEMESTER HOURS
BASIC SCIENCES		
Biology	315 or 210	3.0
Chemistry	100 or 110	3.0
Chemistry	200 or 110	3.0
Computer Science	110	3.0
Mathematics	141	3.0
Mathematics	142 or 152	3.0
Mathematics	300, 356, 378, or BehSci 231/332	3.0
Physics	110	3.0
Physics	215	3.0
ENGINEERING		
Engineering	101	3.0
Engineering Mechanics	220	3.0
Aeronautics	315 or 210	3.0
Astronautics	410	3.0
Elec and Comp Engineering	315 or 231	3.0
SOCIAL SCIENCES		
Behavioral Science	110	3.0
Behavioral Science	310	3.0
Economics	201	3.0
Law	220	3.0
Management	400 or 303	3.0
Political Science	211	3.0
Social Science	412 or 212	3.0
HUMANITIES		
English	111	3.0
English	211 or 341	3.0
or Humanities	200	
English	411, 465, 474, or 484	3.0
or Humanities	400	
Foreign Language	1 & 2	6.0
History	100	3.0
History	300	3.0
Military & Strategic Studies	200	3.0
Military & Strategic Studies	415 or 416	3.0
Philosophy	310 or 311	3.0

INTERDISCIPLINARY

Science and Technology Energy/Systems Option 3.0

(One of the following courses: Aero Engr 241, Chem 335, Comp Sci 453, Engr 311, Geo 310, Mech Engr 312, Meteor 320, Ops Rsch 310, Physics 421, or Sys Engr 310)

NOTES:

1. Biology 210 serves as a core substitute for Biology 315 for Biology majors and is recommended for those pursuing advanced courses in biology (e.g., cadets pursuing careers in the Medical, Dental, Nursing, and Biomedical Sciences Corps). If both Biology 210 and Biology 315 (to include 315S) are taken by a cadet, the cadet will receive credit for both courses due to the significant difference in the material covered in each course.

2. Chemistry course level will be determined by summer placement examination, credit transfer, or AP scores. Chem 110 fills the requirement for cadets who do well on the DFC placement exam but haven't had the prerequisite lab experience expected of cadets. Chem 110 fulfills the requirement for Chem 100 (if not already completed) and Chem 200.

3. Mathematics and Operations Research majors must take Math 378 to fulfill the core Math 300 requirement. Economics majors must take Math 356. Technical departments have the option to require their majors to take Math 356. Behavior Science majors must take both Beh Sci 231 and Beh Sci 332 to satisfy the core substitue for Math 300. All other cadets take Math 300.

4. Biology 210 must be taken by Biology majors. If both Biology 210 and Biology 315 are taken by a cadet, the cadet will receive credit for both courses due to the significant differences in the material covered in the each course.

5. ECE 231 must be taken by Aeronautical Engineering, Astronautical Engineering, Civil Engineering, Computer Engineering, Electrical Engineering, Environmental Engineering, Mechanical Engineering, Physics, and System Engineering majors. Majors in other disciplines requiring greater knowledge of linear circuit analysis and transducer systems may also take this course. If both ECE 315 and ECE 231 are taken by a cadet, the cadet will receive credit for both courses due to the significant differences in the material covered in each course.

6. Philosophy 311 serves as a core substitute for Philos 310 for cadets with DFPY Department Head approval.

7. English 341 will serve as a core substitute for English 211 for any cadet with DFENG approval. English 465, 474, or 484 will serve as a core substitute for English 411 only for cadets pursuing the English major.

8. Humanities 200 is a core substitute for English 211. To take Hum 200, students must have Humanities Chair approval. Hum 200 is an interdisciplinary course designed to lay the

foundation for further study in the disciplines of the Humanities. Hum 400 can fulfill the English 411 core requirement with English Department Head approval.

9. USAFA's foreign language requirement is an 'in-residence' requirement. Few cadets will validate the foreign language requirement. Rather, cadets with foreign language experience/expertise will be placed into the appropriate level course in which to start their foreign language coursework. Some cadets struggle/perform poorly in foreign language courses. For these cadets in a major requiring four semesters of foreign language, a third and fourth semester of foreign language would likely be unfruitful. Recommendations regarding culture-related course alternatives to the 3rd and 4th semester of foreign language will be made on a cadet-by-cadet basis by the affected Dept Head, with inputs from the affected Division Chair and in consultation with the Foreign Language Dept Head and DFR. DFR will forward each recommendation to the Vice Dean for decision. The foreign language requirement (6 or 12 semester hours) can only be fulfilled by courses taken in the same foreign language, unless otherwise waived by the Department of Foreign Languages (DFF). DFF, based on placement testing, determines where in a language sequence each cadet starts. For cadets placing above the 100-level in a foreign language, validation credit for the 100-level courses in that foreign language sequence will be awarded upon successful completion of four foreign language courses at the 200-level or above in that same language. A small number of cadets from an incoming class, to include the four year international cadets, validates the foreign language requirement completely each year. For those cadets, DFF will immediately award validation credit. Based on their foreign language proficiency, these cadets will receive validation credit for the two 100-level courses (131/132) in their proficient foreign language or For Lang 131 and For Lang 132. Additionally, cadets validating the foreign language requirement (those awarded validation credit upon entering USAFA based on DFF's evaluation) are not required to take additional foreign language courses, unless specifically required by their major. For instance, most cadets with a major in the Social Sciences division take four foreign language courses. A cadet with foreign language validation in a Social Sciences major would have two of the required foreign language courses fulfilled by the validation credit. The other two foreign language requirements for the major could then be fulfilled by any two 3.0 semester hour courses (via USAFA Form 69 Academic Waiver Request), as approved by the major.

10. The Science and Technology Energy/Systems Option is fulfilled by one of a suite of courses which vary in their intended course year, but several are 300-level courses.

11. Cadets taking core Mgt 400 should not also register for Mgt 303 or Mgt 448 due to significant course content overlap.

12. Aero Engr 210 serves as a core substitute for Aero Engr 315 for Aero Engr.

7-4. <u>CORE SEQUENCE</u> Cadets will take academic core courses within one year of their course number indicators. For example, while cadets should take a 200-level course their third-class year, they may be able to move the course into the fourth-class or second-class year; they may not move the course to the first-class year. The applicable academic Department Head and the Associate Dean for Student Academic Affairs are the final approval authorities for requests to

move academic core courses outside their intended year for 100-, 200-, and 400-level core courses. Advisors can move 300-level core courses, with the exception of Beh Sci 310, one semester early (third-class spring) or one semester late (first-class fall) in the Q2 on-line registration system based on individual cadet academic program requirements as long as core intentionality is considered and maintained. **Beh Sci 310 requires DFBL Department Head approval to be moved out of the second-class year IAW CCP 65-08.**

7-5. CORE COURSE NUMBERING Core courses will be numbered for the year in which the course is taken (e.g., 100-level for 4°, 400-level for 1°). The course number will therefore reflect the developmental level of the course (not necessarily the nature of the course content).

7-6. CORE SUBSTITUTES If certain cadets need to take a core course more than 1 year away (early) from its core year for their major, that version of the course will be identified as a core substitute and be given a different (appropriate) number. Example: Soc Sci 412 is a core course for all 1° cadets. Pol Sci majors will normally take that course as 3° cadets enrolled in the core substitute course labeled Soc Sci 212. These different versions of a core course require different course descriptions in the Curriculum Handbook because the two versions have different known prior learning experiences and prerequisites and therefore different developmental expectations and approaches to the course. A major requiring cadets to take a core course no more than 1 year away from its core year has the option to create a new core substitute for their majors. Additionally, specialized versions of core courses are required for some majors (e.g., core substitute ECE 231 for core ECE 315) or available with department approval for interested cadets (e.g., core substitute English 341 for core English 211).

7-7. CORE REPLACEMENTS For accreditation-constrained majors (Chem, Bio Chem, Mat Chem, Comp Sci, Comp Sci IA, Aero Engr, Astro Engr, Civ Engr, Comp Engr, El Engr, Env Engr, Mech Engr, and Sys Engr) requiring at least 15 major's courses beyond the core, the 15th course is to be accommodated by using the Academy Option for a major's course. For accreditation-constrained majors requiring 16 major's courses beyond the core, the 16th course is to be accommodated by using a core replacement. A core replacement is a major's course that replaces an otherwise-required core course in order to accommodate including 16 major's courses in a 47-course total sequence. Replaced core courses are to be at the end of developmental core sequences in order to preserve the developmental nature and design of the core curriculum. Ideally, earlier foundational core courses are to be left intact.

7-8. PREREQUISITES FOR CORE COURSES:

COURSE	PREREQUISITES	COURSE	PREREQUISITES
Beh Sci 110		MSS 200	
Chem 100		Physics 215	Physics 110
Comp Sci 110		Pol Sci 211	
Engr 101		Aero Engr 315	Comp Sci 110 & Engr Mech 220
English 111		Beh Sci 310	Beh Sci 110
For Lang 1		Biology 315	Chem 110 or Chem 200
For Lang 2	For Lang 1	ECE 315	Physics 215
History 100		History 300	History 100

Math 141		Math 300/56/77	Math 142 or Math 152
Math 142/152	Math 141	Philos 310	
Physics 110	Coreq: Math 142	En/Sys Option	
Chem 200	Chem 100	Astro Engr 410	Engr 101 & Physics 110
Econ 201	Math 141	English 411	English 211 or Hum 200
Engr Mech 220	Coreq: Physics 110	Mgt 400	Beh Sci 310 and Philos 310
English 211	English 111	MSS 415/416	MSS 200
Law 220		Soc Sci 412	Pol Sci 211

7-9. CORE PREPARATION COURSES: Cadets may be directed into one or more core preparation courses. These courses meet graduation requirements and can count towards USAFA residency requirements in addition to filling the Academy Option in their majors.

a. English 109. English 109 is a three-semester hour course, scheduled for international or ESL cadets. Whenever possible, ESL cadets will take English 109 their first semester, English 111 their second semester, and English 211 their third semester.

b. Math 130. Math 130 is a three-semester hour pre-calculus math course. Cadets are placed based on results of placement testing during BCT. Selected cadets will take Math 130 their first semester, Math 141 their second semester, and Math 142 their third semester.

7-10. GRADE PROTECTION

a. Fourth-Class Advanced-Placement Courses. Cadets placed into Math 142(FR), Math 152 (Calculus II), Math 253 (Calculus III), or Math 245 (Differential Equations) in their fourth-class fall will have grade protection.

(1) Cadets deficient ("C-" or "D") or failing at prog may withdraw and receive a "W" grade on their transcript or they may stay enrolled in the course. A cadet who stays enrolled will not be placed on academic probation at prog solely based on a deficient or failing grade in their advanced-placed mathematics course.

(2) Cadets earning a C- or D at the end of the semester may either a) keep the grade earned in the course or b) immediately retake Calculus II (Math 142), Calculus III (Math 243), or Differential Equations (Math 245) respectively in the spring semester and receive a "WP" grade on their transcript in place of the deficient grade for the fall. Note: a proficient grade ("C" or better) is generally required to move on to the next higher mathematics course; see the course descriptions later in this handbook for specific details on course pre-requisites.

(3) Cadets who fail Math 152 at the end of the semester will be given a "W" on their transcript and be automatically enrolled in Math 142 in the spring semester.

(4) Cadets who fail Math 253 or Math 245 at the end of the semester will be given a "W" on their transcript and can retake Calculus III or Differential Equations respectively depending on the requirements of their selected major.

b. Math 243. During their first attempt at Math 243, cadets will have grade protection. Cadets may drop the course anytime during the semester through lesson 30 and receive a "W". Cadets previously enrolled in Math 253 are not eligible for grade protection. A cadet will not be considered deficient in academics solely based on a deficient grade at prog in Math 243.

7-11. PHYSICAL EDUCATION COURSES. Cadets must pass a minimum of 10 Physical Education (Phy Ed) courses, each worth 0.5 semester hours of course credit. With few exceptions, cadets take Phy Ed courses each of their eight semesters. Each course consists of an 8-lesson block of instruction. The only exception is Phy Ed 119, Basic Swimming, which is a 16-lesson block. Two Phy Ed courses will be taken in the fourth- and first-class years. Three Phy Ed courses will be taken in the third- and second-class years. The following is the normal Phy Ed progression:

	1	**2**	**3**
C4C	Boxing (M) Intro to Combatives (W)	Physical Development	
C3C	Swimming	Water Survival	Individual Sport Elective (Tennis/Racquetball/Golf)
C2C	Combatives I	Combatives II	Team Sport Elective (Volleyball/Basketball/Softball/Soccer)
C1C	Open Elective	Open Elective	

a. Basic Cadet Training (summer before fourth-class year); Phy Ed 100, Basic Physical Training (pass/fail)

b. Core (required) courses: 3 combatives, 2 aquatics, and physical development

Phy Ed 110	Boxing (males only)
or Phy Ed 114	Intro to Combatives (females only)
Phy Ed 111	Swimming
or Phy Ed 119	Basic Swimming
Phy Ed 112	Physical Development
Phy Ed 222	Water Survival (prereq: 111 or 119)
or Phy Ed 211	Basic Water Survival (prereq: 111 or 119)
or Phy Ed 219	Basic Swimming II (prereq: 119)
Phy Ed 215	Combatives I
Phy Ed 315	Combatives II (prereq: 215)

c. Individual Sport Electives (Required having at least one of the following):

Phy Ed 340	Racquetball

Phy Ed 341	Tennis
Phy Ed 342	Golf
Phy Ed 343	Open Rock Climbing

d. Team Sport Electives (Required having at least one of the following):

Phy Ed 484	Volleyball
Phy Ed 486	Basketball
Phy Ed 487	Soccer
Phy Ed 488	Softball

e. Open Electives (Required having at least two of the following):

Phy Ed 483	Scuba
or additional	Team or Individual Sport Elective(s)
or Phy Ed 477*	Independent Exercise (first-class cadets only)
or Phy Ed 479*	Cadet Instructor (first-class cadets only)

* Cadets are registered for these courses, due to unique medical situations, by the Athletic Department Scheduling and Grading Division (ADPG).

f. Intercollegiate Courses (Substitute Phy Ed course credit for each year on an intercollegiate roster):

Phy Ed 152	4th-Class Intercollegiate Sports (sub for Phy Ed 112)
Phy Ed 252	3rd-Class Intercollegiate Sports (sub for Individual Sport Elective)
Phy Ed 352	2nd-Class Intercollegiate Sports (sub for Team Sport Elective)
Phy Ed 452	1st-Class Intercollegiate Sports (sub for Open Elective)
Phy Ed 8XX*	
Phy Ed 9XX*	

* These are scheduling codes. They are not actual courses and do not fill any graduation or Phy Ed course requirements.

g. 40-Lesson Academic Phy Ed Courses:

Phy Ed Aca 440	Physiology of Exercise (3 sem hrs)
Phy Ed Aca 460	The Art and Science of Coaching (3 sem hrs)
Phy Ed Aca 499	Independent Research (3 sem hrs)
Phy Ed Aca 499A	Independent Research (2 sem hrs)
Phy Ed Aca 499B	Independent Research (1.5 sem hrs)
Phy Ed Aca 499C	Independent Research (1 sem hr)

7-12. USAFA OUTCOMES. The USAFA Outcomes are described in depth in the document, "The USAFA Outcomes."

a. Tiered Hierarchy. The USAFA Outcomes are in tiered hierarchical form with each tier including ever increasing levels of specificity and detail, from Tier-1's broad Responsibilities, Skills and Knowledge outcomes to Tier-5's specific courses, programs, and events that develop and assess the outcomes.

b. Underlying Assumptions and Expectations. The assumptions and expectations that underlie the establishment and maintenance of the Curriculum and Outcome Alignment Plan (COAP) are as follows:

- The USAFA curriculum is intentionally designed to accomplish the USAFA outcomes.
- Each outcome will be developed over the course of cadets' entire four year experience.
- Intentional development of each outcome will occur at least once per class year.
- The mapping of courses and programs to outcomes will be summarized in the Curriculum and Outcome Alignment Plan (COAP), Table 7-1.

c. COAP Maintenance. Each of the horizontal rows in the COAP becomes the starting point for a four-year education, training, and experience "course" for its outcome. Each outcome will have an "Outcome Team" composed of representatives from each of the courses/programs on the COAP for that outcome. The Outcome Team may include representatives from other course(s)/program(s) that also contribute to the development and assessment of that outcome but are not currently in the COAP. The Outcome Teams will work to intentionally build upon prior learning experiences to develop and assess the outcome over the entire 4-year USAFA cadet career.

.

Table 7-1: Core Curriculum and Outcome Alignment Plan:

Responsibility Outcomes	Fourth Class	Third Class	Second Class	First Class
Ethical Reasoning and Action	Honor Ed; C&L 101;- Core Values Ed; Cmsng Edu 100; NCLS	Honor Ed; C&L 201; Cmsng Edu 200; NCLS	Phil 310; Honor Ed; C&L 301; Cmsng Edu 300; NCLS	English 411; Honor Ed; C&L 401; NCLS
Respect for Human Dignity	Beh Sci 110; BCT; Cmsng Edu 100; C&L 101	Cmsng Edu 200; C&L 201	Beh Sci 310; History 300; Cmsng Edu 300; C&L 301	English 411; Cmsng Edu 400; C&L 401
Service to the Nation	History 100; Core Values Ed; FHF	MSS 200; Pol Sci 211; FHF	FHF	MSS 415/416; English 411; FHF
Lifelong Development & Contributions	Cmsng Edu 100	Cmsng Edu 200	Beh Sci 310; Cmsng Edu 300	Mgt 400; Cmsng Edu 400
Intercultural Competence and Involvement	For Lang 131-132		History 300 Phil 310	Soc Sci 412

Skills Outcomes	Fourth Class	Third Class	Second Class	First Class
Quantitative Literacy	Math 141/142; Physics 110; Chem 100; English 111	Engr Mech 220; Chem 200; Econ 201; Physics 215	Math 300/356/378; Aero Engr 315; ECE 315	Astro Engr 410
Information Literacy	Comp Sci 110; English 111	English 211		
Oral Communication	For Lang 131-132;	Engr Mech 220; English 211		English 411
Written Communication	English 111; Math 141/142; History 100; For Lang 131-132	English 211; Law 220	History 300	English 411; Cmsng Edu
Critical Thinking	Beh Sci 110; Chem 100; Physics 110; For Lang 131-2 English 111; History 100	Econ 201; English 211; Chem 200; Physics 215; MSS 200; Pol Sci 211	Philos 310; Bio 315; History 300; Cmsng 300	MSS 415/416; English 411
Decision Making	Engr 101; Chem 100; Phy Ed 110/114; Cmsng Edu 100	Chem 200; Law 220; Pol Sci 211; Econ 201; Cmsng Edu 200	Aero Engr 315; ECE 315; Phy Ed 215/315; Cmsng Edu 300	Mgt 400; Astro Engr 410; MSS 415/416; Cmsng Edu 400
Stamina	BCT; PFT/AFT; Phy Ed 110	PFT/AFT; Phy Ed 111/222	PFT/AFT; Phy Ed 315	PFT/AFT
Courage	History 100; BCT; C&L 101; Core Values Ed; Phy Ed 110/114; Recognition; Honor Ed; NCLS	Phy Ed 111/222; Honor Ed; C&L 201; NCLS	Phy Ed 215/315; C&L 301; Honor Ed; NCLS	C&L 401; Honor Ed; NCLS
Discipline	BCT; PFT/AFT; Phy Ed 110/114	PFT/AFT; Phy Ed 111/222	PFT/AFT; Phy Ed 215/315	PFT/AFT
Teamwork	FHF; Competitive Athletics	FHF; Cmsng Edu 200; Competitive Athletics	FHF; Cmsng Edu 300, Competitive Athletics	FHF; Cmsng Edu 400, Competitive Athletics

Knowledge Outcomes	Fourth Class	Third Class	Second Class	First Class
Heritage and Application of Air, Space, and Cyberspace Power	BCT; Comp Sci 110; History 100; FHF	MSS 200; Engr Mech 220; FHF; Cmsng Edu 200	Aero Engr 315;FHF; Ops AF	Astro Engr 410; FHF
Nat'l Security & Full Spectrum of Joint & Coalition Warfare	History 100; Honor Ed	Pol Sci 211	History 300	MSS 415/416; Soc Sci 412
Civic, Cultural and International Environments	For Lang 131-132; Cmsng Edu 100	English 211; Econ 201; MSS 200	Philos 310; Cmsng Edu 300; History 300	Soc Sci 412; English 411
Ethics & the Foundations of Character	BCT; English 111; C&L 101; Core Values Ed; Honor Ed; Cmsng Edu 100; NCLS	Law 220; Honor Ed; Comsng Edu 200; C&L 201; NCLS	Philos 310; C&L 301; Honor Ed; Cmsng Edu 300; NCLS	Mgt 400; English 411; C&L 401; Honor Ed; Cmsng Edu 400; NCLS
Principles of Science and the Scientific Method	Chem 100; Beh Sci 110; Math 141/142; Physics 110	Chem 200; Physics 215	Biology 315; Math 300/356/378	
Principles of Engineering & the Application of Technology	Engr 101; Comp Sci 110	Engr Mech 220	Aero Engr 315; ECE 315	Astro Engr 410

d. Alternate COAP. Beginning in 2012, USAFA began looking at an alternate COAP. While substantively very similar to the current COAP, the new model replaces Responsibilities, Skills, and Knowledge Tier 1 Outcomes with the following:

- Ethics and Citizenship
- Thinking and Acting in a Complex World
- National Security Through Diverse Perspectives
- Mental and Physical Resilience

This alternate model is graphically displayed in Diagram 7-2. Additionally, Table 7-2 depicts the relationship between the core curriculum and the alternate Tier-1 outcomes. Functionally, the alternate COAP is identical to Table 7-1, where each of the horizontal rows in the COAP represents the starting point for a four-year education, training, and experience "course" for its outcome.

Diagram 7-2.

USAFA Outcomes

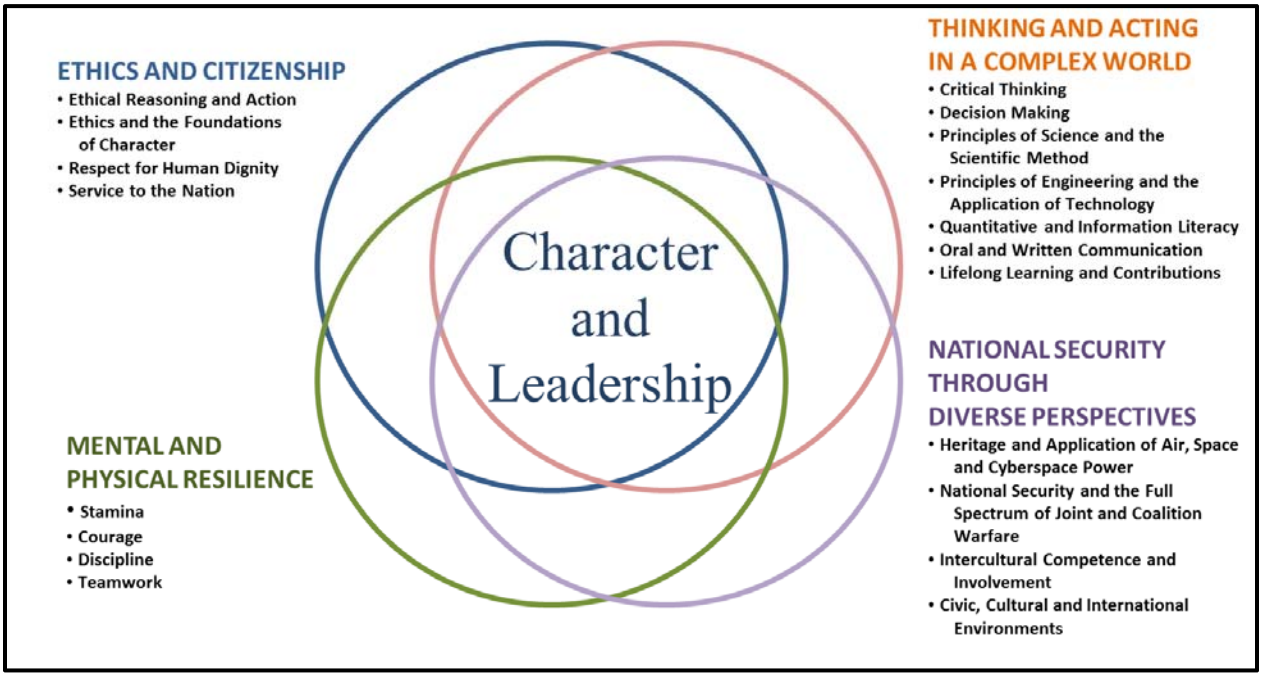

Table 7-2: Alternate Core Curriculum and Outcome Alignment Plan:

Ethics & Citizenship	Fourth Class	Third Class	Second Class	First Class
Ethical Reasoning and Action	Honor Ed; C&L 101;- Core Values Ed; Cmsng Edu 100; NCLS	Honor Ed; C&L 201; Cmsng Edu 200; NCLS	Phil 310; Honor Ed; C&L 301; Cmsng Edu 300; NCLS	English 411; Honor Ed; C&L 401; NCLS
Ethics & the Foundations of Character	BCT; English 111; C&L 101; Core Values Ed; Honor Ed; Cmsng Edu 100; NCLS	Law 220; Honor Ed; Comsng Edu 200; C&L 201; NCLS	Philos 310; C&L 301; Honor Ed; Cmsng Edu 300; NCLS	Mgt 400; English 411; C&L 401; Honor Ed; Cmsng Edu 400; NCLS
Respect for Human Dignity	Beh Sci 110; BCT; Cmsng Edu 100; C&L 101	Cmsng Edu 200; C&L 201	Beh Sci 310; History 300; Cmsng Edu 300; C&L 301	English 411; Cmsng Edu 400; C&L 401
Service to the Nation	History 100; Core Values Ed; FHF	MSS 200; Pol Sci 211; FHF	FHF	MSS 415/416; English 411; FHF

Thinking & Acting in a Complex World	Fourth Class	Third Class	Second Class	First Class
Critical Thinking	Beh Sci 110; Chem 100; Physics 110; For Lang 131-2 English 111; History 100	Econ 201; English 211; Chem 200; Physics 215; MSS 200; Pol Sci 211	Philos 310; Bio 315; History 300; Cmsng 300	MSS 415/416; English 411
Decision Making	Engr 101; Chem 100; Phy Ed 110/114; Cmsng Edu 100	Chem 200; Law 220; Pol Sci 211; Econ 201; Cmsng Edu 200	Aero Engr 315; ECE 315; Phy Ed 215/315; Cmsng Edu 300	Mgt 400; Astro Engr 410; MSS 415/416; Cmsng Edu 400
Principles of Science and the Scientific Method	Chem 100; Beh Sci 110; Math 141/142; Physics 110	Chem 200; Physics 215	Biology 315; Math 300/356/378	
Principles of Engineering & the Application of Technology	Engr 101; Comp Sci 110	Engr Mech 220	Aero Engr 315; ECE 315	Astro Engr 410
Quantitative Literacy	Math 141/142; Physics 110; Chem 100; English 111	Engr Mech 220; Chem 200; Econ 201; Physics 215	Math 300/356/378; Aero Engr 315; ECE 315	Astro Engr 410
Information Literacy	Comp Sci 110; English 111	English 211		
Oral Communication	For Lang 131-132;	Engr Mech 220; English 211		English 411
Written Communication	English 111; Math 141/142; History 100; For Lang 131-132	English 211; Law 220	History 300	English 411; Cmsng Edu
Lifelong Learning & Contributions	Cmsng Edu 100	Cmsng Edu 200	Beh Sci 310; Cmsng Edu 300	Mgt 400; Cmsng Edu 400

National Security Through Diverse Perspectives	Fourth Class	Third Class	Second Class	First Class
Heritage and Application of Air, Space, and Cyberspace Power	BCT; Comp Sci 110; History 100; FHF	MSS 200; Engr Mech 220; FHF; Cmsng Edu 200	Aero Engr 315;FHF; Ops AF	Astro Engr 410; FHF
Nat'l Security & Full Spectrum of Joint & Coalition Warfare	History 100; Honor Ed	Pol Sci 211	History 300	MSS 415/416; Soc Sci 412
Intercultural Competence and Involvement	For Lang 131-132		History 300 Phil 310	Soc Sci 412
Civic, Cultural and International Environments	For Lang 131-132; Cmsng Edu 100	English 211; Econ 201; MSS 200	Philos 310; Cmsng Edu 300; History 300	Soc Sci 412; English 411

Mental & Physical Resilience	Fourth Class	Third Class	Second Class	First Class
Stamina	BCT; PFT/AFT; Phy Ed 110	PFT/AFT; Phy Ed 111/222	PFT/AFT; Phy Ed 315	PFT/AFT
Courage	History 100; BCT; C&L 101; Core Values Ed; Phy Ed 110/114; Recognition; Honor Ed; NCLS	Phy Ed 111/222; Honor Ed; C&L 201; NCLS	Phy Ed 215/315; C&L 301; Honor Ed; NCLS	C&L 401; Honor Ed; NCLS
Discipline	BCT; PFT/AFT; Phy Ed 110/114	PFT/AFT; Phy Ed 111/222	PFT/AFT; Phy Ed 215/315	PFT/AFT
Teamwork	FHF; Competitive Athletics	FHF; Cmsng Edu 200; Competitive Athletics	FHF; Cmsng Edu 300, Competitive Athletics	FHF; Cmsng Edu 400, Competitive Athletics

CHAPTER 8

ACADEMIC PROGRAMS

8-1. PURPOSE OF THE ACADEMIC PROGRAM SECTION:

a. Selecting an academic program is one of the most important decisions a cadet makes during his or her career at USAFA. This handbook is designed to help make the best choice possible. The program chosen dictates which classes to attend, how many courses to take, future career fields, and graduate school opportunities. Cadets must be active participants in choosing and designing their academic programs and monitoring their progress.

b. To determine their preference for an academic major, cadets should consider the kind of work they would like to do; read AFM 36-2105 (especially attachment 7), which describes specialties; and consult their AAOCA, sponsor, career counselor, and an academic advisor or the Advisor-in-Charge in that discipline. Cadets who determine their preference early enough can prepare to compete for limited entry specialties.

c. For more information concerning majors, courses and career paths, many departments have Home Pages on the World Wide Web at: http://www.usafa.edu.

8-2. HOW TO USE THE ACADEMIC PROGRAM SECTION: The majors' requirements in this section apply to the Class of 2013 and subsequent classes. Programs are divided by type: divisional majors, disciplinary majors, minors (see Chapter 10), and the Bachelor of Science Program (see Chapter 11). Each program is described in a similar format, telling about the program, program requirements, and a suggested course sequence. AAOCAs can help cadets find the appropriate person to talk to before registering for courses.

8-3. TYPES OF ACADEMIC PROGRAMS: USAFA offers a total of 30 academic majors and three minors. The departments offer two types of majors: disciplinary and divisional. There are 22 disciplinary, 4 divisional, and 4 interdisciplinary majors. The programs and sponsoring division or department are listed below.

MAJOR/MINOR	SPONSORING DIVISION OR DEPARTMENT	REQ SEM HRS
BASIC SCIENCES DIVISION		
Basic Sciences Divisional Major	Basic Sciences Division	140
Biology Major	Biology	146
Chemistry Major	Chemistry	146
Computer Science Major	Computer Science	146
Mathematics Major	Mathematical Sciences	146
Physics Major	Physics	146
ENGINEERING DIVISION		
General Engineering Divisional Major	Engineering Division	140
Aeronautical Engineering Major	Aeronautics	146
Astronautical Engineering Major	Astronautics	149

Civil Engineering Major	Civil and Environmental Engineering	146
Computer Engineering Major	Computer Science, Electrical and Computer Engineering	146
Electrical Engineering Major	Electrical and Computer Engineering	146
Environmental Engineering Major	Civil and Environmental Engineering	146
Mechanical Engineering Major	Engineering Mechanics	147
Systems Engineering Major	Engineering and Social Sciences Divisions	146
HUMANITIES DIVISION		
Humanities Divisional Major	Humanities Division	140
English Major	English and Fine Arts	146
History Major	History	146
Military & Strategic Studies Major	Military & Strategic Studies	146
Foreign Language Minor	Foreign Language	*
Philosophy Major / Minor	Philosophy	146
Religion Studies Minor	Philosophy	*
SOCIAL SCIENCES DIVISION		
Social Sciences Divisional Major	Social Sciences Division	140
Behavioral Sciences Major	Behavioral Sciences and Leadership	146
Economics Major	Economics and Geosciences	146
Geospatial Science Major	Economics and Geosciences	146
Legal Studies Major	Law	146
Management Major	Management	146
Political Science Major	Political Science	146
INTERDISCIPLINARY		
Foreign Area Studies Major	Economics and Geosciences, History Foreign Languages, Political Science	146
Meteorology Major	Economics and Geosciences, Physics	146
Operations Research Major	Computer Science, Economics and Geosciences, Mathematical Sciences, Management	146
Space Operations Major	Astronautics	146
BACHELOR OF SCIENCE PROGRAM		
See Chapter 11	Office of Student Academic Affairs	131
* To earn a minor, cadets must complete the specific minor's requirements and the requirements for one or more of the divisional, disciplinary, or interdisciplinary majors. Cadets with divisional majors must complete at least 146 semester hours to qualify for a minor. Cadets may earn more than one minor provided the specified criteria are met for each.		

8-4. ACADEMIC PROGRAM REQUIREMENTS: Beyond core courses, majors require an additional 36-45 semester hours plus 3 semester hours of Academy Option.

8-5. INITIAL CHOICE OF PROGRAM: Each semester, the faculty hosts Majors' Night, an event designed to give cadets the opportunity to explore academic programs and talk with program representatives. While exploring programs, cadets seek advice from their AAOCAs. After selecting a program, cadets should seek help primarily from their academic advisors. While the information in this chapter may be useful to AAOCAs and academic advisors, its purpose is to answer common questions cadets often have regarding academic programs.

8-6. TIMELINE TO DECLARE A MAJOR: Cadets may declare a major as soon as they desire, however, academic advisors will highly recommend that cadets wait at least until their second semester. Declaring a major early does not allow cadets to adjust their courses during the first two semesters. Cadets must declare a major by the registration deadline of their third semester. However, several majors require cadets to take courses during their third semesters that are prerequisites for majors courses. For example, if cadets plan to major in Aeronautical Engineering, Astronautical Engineering, Civil Engineering, Electrical Engineering, Environmental Engineering, General Engineering, Mathematics, Materials Chemistry, Mechanical Engineering, Meteorology, Operations Research, Physics, or Space Operations, they should plan to take Math 243 their third semester if Math 243 (or Math 253) was not taken during the fourth-class year. If cadets are planning to major in Computer Science or Computer Engineering they should declare before the registration deadline of their second semester and plan to enroll in Comp Sci 210 third semester. AAOCAs must discuss the requirements for the majors in which cadets have an interest. This information is provided in the course sequence tables for each major listed in this handbook. Cadets should also attend Majors' Night for in-depth academic program information. The process of declaring a major entails deciding on a course of study and scheduling a specific sequence of courses that meets graduation requirements. Cadets can change their major as long as they have time to meet the major requirements. However, most majors have required non-core, 200-level courses, so, the longer cadets wait the more difficult changing majors becomes. Third-class cadets will not be permitted to depart on Thanksgiving Break until they have declared an academic major.

8-7. CHANGE OF MAJOR. You may change majors at any time preceding the deadline described in para 8-6. Initial selection or change of program should be timed so that no changes need be made for the current semester.

8-8. HOW DO I CHOOSE AN ACADEMIC PROGRAM? Many factors go into deciding what program to choose. The first question you should ask yourself is, "What do I want to do once I am commissioned?" Talk to officers in varied career fields. Ask them what their majors were in college and ask if their majors are enhancing their career efforts. Remember, your major can dictate what career fields you may be eligible to enter. Even if your goal is to fly, your major can open or restrict future career opportunities. Many career fields have specific requirements or are limited in the numbers they accept each year. Remember, what job you do after commissioning will be determined by Air Force requirements, by your qualifications, and by what you want to do. For more information concerning careers in the Air Force, Cadet Personnel (DPY) keeps up-to-date career briefs.

a. After you have looked at Air Force requirements, consider what courses interest you. As you progress through the curriculum, the courses often become more difficult. If you are interested in a subject, you will more likely spend the time needed to do well in those courses. Look to your academic strengths. Even though you may like a particular major, if you do not do well in those types of courses, it is highly unlikely that you will succeed at that major. Talk to your AAOCA, AOC, and AMTs. They can be the most important people in helping you decide upon a program. Your AAOCA can direct you to people to talk with about your options. If you have unanswered questions about a program, find a faculty member with whom you can talk. One of the best times to do this is during Majors' Night at

the beginning of each fall and spring semester. Cadet participation in Majors' Night is voluntary and provides a gathering of faculty from all academic departments, ready to discuss their departments' offerings and the potential benefits of their programs.

b. Finally, talk to peers in your squadron. Though "dorm advising" will not provide you with all the information you need to know, it will give you an additional perspective on the programs offered.

8-9. HOW DO I DECLARE A MINOR?

a. You must first declare an academic major before you can declare a minor.

b. You must declare your intention to complete the requirements of a minor as early as possible. First, contact the department administering the minor. After discussing course requirements, meet with your academic advisor. Your academic advisor can add the minor to your academic program via Q2.

c. To earn a minor, you must complete the specific minor's requirements and the requirements for one or more of the divisional, disciplinary, or interdisciplinary majors. Cadets with divisional majors must complete at least 146 semester hours to qualify for a minor. You may earn more than one minor provided the specified criteria are met for each.

8-10. HOW DO I DECLARE AN ACADEMIC MAJOR? To declare a major, meet with your academic advisor and communicate your intentions to declare. Pick up your academic advising folder from your advisor (AAOCA) and deliver it to the secretary or Advisor-in-Charge of the department of your major. Cadets will be assigned an academic advisor from the appropriate academic department, and an entire four year course plan will be registered on-line using Q2.

8-11. WHAT IF I CHOOSE THE "WRONG" MAJOR? After you have completed at least one semester in a major, you should have a better understanding of the major. If you find you have chosen the wrong major, you can change majors or options within the major. A decision to change a major should not be taken lightly; however, do not keep a program that might put your graduation and commissioning in danger. Talk to your advisor before you make a decision. Look at your performance in your current program. Are you doing poorly in the courses because you have difficulty comprehending the subject matter? Are you studying correctly? Remember, even though you want a specific major, your primary goal should be to become an Air Force officer, not earn a specific major.

8-12. HOW CAN I LOSE MY ACADEMIC MAJOR? An ARC or Academy board may direct you to change your major if you are academically deficient. When an ARC or the Academy Board removes you from your major, whether putting you into another major or the Bachelor of Science Program, you have turned your academic program over to them. Often, this happens to cadets who simply choose the wrong major. You will maintain better control of your academic program by making appropriate and timely decisions. The department head responsible for each major may deny that major to a cadet who does not maintain at least a 2.00 major's GPA or who has more than one deficient grade in courses used to determine the major's GPA.

8-13. CAN I GET MY MAJOR BACK ONCE I HAVE LOST IT? If you have previously been denied or removed from a major by a department head, you may again declare the major after obtaining approval from the department head. If you were ARC-directed to change majors, you may again declare your original major with the ARC Chair's approval.

8-14. WHAT IF I CHOOSE TO DECLARE A DIVISIONAL MAJOR? After consulting with your advisor, you may decide that a divisional major is best for you. If the choice to declare a divisional major was made by you and not the Academic Review Committee, you may subsequently declare a disciplinary major without having to petition the ARC. You must coordinate with the appropriate academic department.

8-15. MULTIPLE MAJORS. While at the Academy, you may earn more than one major. Your diploma will reflect both your primary and secondary major. Your transcript will indicate both majors and minors. Individual courses required in both majors count for both, but cadets must meet all requirements for both majors. Cadets with multiple majors must designate a primary major prior to the registration deadline in the fall semester of their first-class year. The following describes multiple majors and their criteria:

a. One Divisional and One Disciplinary: The majors must be in separate divisions. You must complete at least four non-core academic courses (12.0 sem hrs) in residence in excess of the disciplinary major's requirements and must meet all the requirements of the divisional major.

b. Both Disciplinary: You must complete at least four non-core academic courses (12.0 sem hrs) in residence in excess of the primary major's requirements and must meet all requirements of the secondary major.

c. Both Divisional: You must complete at least six non-core academic courses (18.0 sem hrs) in residence in excess of your primary major's requirements and must meet all requirements of the secondary major.

d. More Than Two Majors: You may receive a third or additional major, provided the additional major(s) meet(s) the above criteria.

8-16. HOW DO I DECLARE A DOUBLE MAJOR? To declare a double major, meet first with your current academic advisor to discuss the additional requirements of the second major and how it will impact your academic program. Second, meet with the Advisor-in-Charge of the second major you are declaring. Your academic advisor will ensure the second major is added to your academic program. Cadets pursuing double majors must ensure both majors are listed on the academic program summary. If a discipline has more than one option, you cannot earn a double major in that discipline.

8-17. CAN I DECLARE THE BACHELOR OF SCIENCE PROGRAM? Cadets cannot declare the Bachelor of Science Program (BSP). The BSP must be recommended by an Academic Review Committee Chair or the Office of Student Academic Affairs and approved by the Vice

Dean of the Faculty. Interested cadets should discuss the issue with their AAOCA/academic advisor and a member of the Curriculum Division of Student Academic Affairs (DFRC). BSP approval can happen no earlier than the cadet's third semester. The expectation is that all cadets will earn a major; the BSP is an exception to this rule to provide an alternate path to graduation for a small number of cadets.

8-18. ACCREDITATION. All graduates are awarded a Bachelor of Science Degree, accredited by The Higher Learning Commission, The North Central Association of Colleges and Schools. (30 N. LaSalle Street, Suite 2400, Chicago, Illinois 60602-2504, phone (312) 263-0456). All graduates will have BACHELOR OF SCIENCE printed on their diploma. Cadets completing multiple majors will have both appear on their diplomas. For a limited number of disciplines, associated professional bodies have issued professional accreditation. The Aeronautical Engineering, Astronautical Engineering, Civil Engineering, Computer Engineering, Electrical Engineering, Environmental Engineering, Mechanical Engineering, and Systems Engineering majors are accredited by the Engineering Accreditation Commission of ABET, http://www.abet.org. The Chemistry, Biochemistry, and Materials Chemistry options within the Chemistry major are approved by the Committee on Professional Training of the American Chemical Society. The Computer Science major is accredited by the Computing Accreditation Commission of ABET, http://www.abet.org. The Management major is accredited by the Association to Advance Collegiate Schools of Business (AACSB). Many disciplines have no professional body that performs the accreditation functions; for those majors, the accreditation by The Higher Learning Commission is the highest possible review.

CHAPTER 9

DIVISIONAL MAJORS

MAJOR
Basic Sciences
General Engineering
Humanities
Social Sciences

BASIC SCIENCES

THE BASIC SCIENCES MAJOR AT A GLANCE: The Basic Sciences major is a divisional major incorporating the basic sciences of Biology, Chemistry, Computer Science, Mathematics, and Physics. This divisional program is recommended for cadets who wish to major in the sciences but prefer a broad, flexible curriculum with a high degree of individual choice. This program is also a sensible alternative for cadets already declared in either a Basic Sciences or Engineering disciplinary major who, for a variety of reasons, find the divisional approach more suited to fulfilling graduation requirements.

Since the Basic Sciences major lacks the structure of a disciplinary major, cadets wishing to go to graduate school in a science field should pay particular attention to course selection, or they will most likely be required to take additional undergraduate courses in the selected discipline prior to entering graduate school

If you are undeclared or are in a major outside of the Basic Sciences, contact the Basic Sciences Advisor-in-Charge in DFB at 333-6028. If you are currently declared with one of the Basic Sciences disciplines, tell your advisor that you would like to change to the Basic Sciences major. Your advisor should contact the Basic Sciences AIC to initiate the change of major request.

COURSE REQUIREMENTS: 140 Semester Hours

A. 96 *Semester hours of Dean's academic core courses.*

Required Core Substitute		Substitutes for
Math 356	Probability and Statistics for Engineers and Scientists	Math 300

B. *5 Semester hours of Director of Athletics courses.*

C. *3 Semester hours of Academy Option.*

D. *36 Semester hours of major's courses:*

There are no specific courses mandatory for the Basic Sciences major. This means the cadet has tremendous flexibility in selecting a unique set of courses. Provided the cadet is following a coherent course of study approved by his/her advisor and the Basic Sciences AIC, the cadet is free to pursue practically any avenue of interest in the sciences.

Depth Requirements:

1. At least 18 semester hours at the 300- or 400-level.
2. At least 3 of the 300- or 400-level courses must have formal course prerequisites.
3. Up to six hours of Special Topics (495) courses may be included.

Distribution:

1. Twelve semester hours must be a coherent course of study from any of the departments

within the Basic Sciences Division or in related fields such as operations research, engineering, meteorology, space operations, or materials chemistry.

2. A cadet must also take 15 semester hours of non-core courses from the Basic Sciences Division, composed of one 3 semester hour course from each of the disciplines of: Biology, Chemistry, Computer Science, Mathematical Science, and Physics. Recommended courses from each discipline are listed below.

   a. Biology

Biology 345 – Aerospace Physiology
Biology 370 – Human Nutrition
Biology 380 – Principles of Ecology

   b. Chemistry

Chem 230 – Introductory Organic Chemistry
Chem 325 – Space Chemistry
Chem 350 – Chemistry of Weapons
Chem 381 – Environmental Chemistry

   c. Computer Science

Comp Sci 210 – Introduction to Programming
Comp Sci 211 – Introduction to Programming for Scientists and Engineers (recommended)

   d. Mathematics

Math 243 – Calculus III (or Math 253)
Math 245 – Differential Equation
Math 310 – Mathematical Modeling
Math 344 – Matrices and Differential Equations
Math 359 – Design and Analysis of Experiments

   e. Physics

Physics 264 – Modern Physics
Physics 310 – Principles of Nuclear Engineering
Physics 315 – Combat Aviation Physics
Physics 370 – Upper Atmospheric and Geo-Space Physics
Meteor 320 – Introduction to Meteorology and Aviation Weather

NOTE: A course may not be counted toward both distribution requirements.

SUGGESTED COURSE SEQUENCE

Basic Science Major

	4°	hrs	per	3°	hrs	per	2°	hrs	per	1°	hrs	per
	For Lang 1	3	2	Basic Sci Option #1	3	1	Basic Sci Option #5	3	1	Basic Sci Option #9	3	1
	Beh Sci 110	3	1	Basic Sci Option #2	3	1	Basic Sci Option #6	3	1	Academic Div Option	3	1
Fall	**History 100**	3	1	**Econ 201**	3	1	**Biology 315**	3	2	**Soc Sci 412**	3	1
	Math 141	3	1	**Physics 215**	3	2	**Philos 310**	3	1	**MSS 415/416**	3	1
	Comp Sci 110	3	1	**English 211**	3	1	**ECE 315**	3	1	**English 411**	3	1
	Phy Ed	0.5	2	**MSS 200**	3	1	**History 300**	3	1	*Phy Ed*	1	2
		15.5	8	*Phy Ed*	1	2	*Phy Ed*	0.5	2		16	7
					19	9		18.5	9			
	For Lang 2	3	2	Basic Sci Option #3	3	1	Basic Sci Option #7	3	1	Academic Div Option	3	1
	Chem 100	3	2	Basic Sci Option #4	3	1	Basic Sci Option #8	3	1	Academic Div Option	3	1
Spring	**Engr 101**	3	1	**Chem 200**	3	2	**Aero Engr 315**	3	1	***Academy Option***	3	1
	English 111	3	1	**Pol Sci 211**	3	1	**Math 356**	3	1	**Astro Engr 410**	3	1
	Math 142	3	1	**Law 220**	3	1	**Beh Sci 310**	3	1	**Mgt 400**	3	1
	Physics 110	3	2	**Engr Mech 220**	3	1	**S/T Energy Sys Option**	3	1	*Phy Ed*	0.5	2
	Phy Ed	0.5	2	*Phy Ed*	0.5	2	*Phy Ed*	0.5	2		15.5	7
		18.5	11		18.5	9		18.5	8			

Course Unit Summary
Core (32)
Major (12)
Academy Option (1)
Phy Ed (10)

Semester Hour Summary		
Core =	**96.0**	Sem Hours
Major =	36.0	"
Academy Option =	3.0	"
Phy Ed =	5.0	"
Total =	**140.0**	"

GENERAL ENGINEERING

THE GENERAL ENGINEERING MAJOR AT A GLANCE: The General Engineering major is a divisional major incorporating the engineering disciplines of Aeronautical, Astronautical, Civil, Computer, Electrical, Environmental, Mechanical, and Systems Engineering. This divisional program is recommended for cadets who wish to major in engineering but prefer a broad, flexible curriculum with a high degree of individual choice. This program is an alternative for cadets already declared in an Engineering disciplinary major who for a variety of reasons find the divisional approach more suited to fulfilling graduation requirements.

The USAFA general engineering curriculum will not immediately prepare graduates to pursue an advanced degree in a specific engineering discipline. The general engineer may first be required to obtain an undergraduate degree from another university. Most universities require at least one-year academic residence before granting a degree from their institutions. Some universities do not require an accredited undergraduate degree, but additional undergraduate work usually is necessary before acceptance into a graduate program.

The curriculum at USAFA provides cadets the maximum flexibility to selectively structure their academic program to individual preferences. The program, however, is not accredited by ABET, Inc. A Bachelor of Science degree in General Engineering is awarded upon completion of all requirements listed below.

If you are undeclared or are in a major outside of the Engineering Division, contact the General Engineering Advisor-in-Charge in DFCE at 3-3150. If you are currently declared with one of the Engineering Division disciplines, tell your advisor that you would like to change to the General Engineering major. Your advisor should then contact the General Engineering AIC in order to initiate the change of major request.

COURSE REQUIREMENTS: 140 Semester Hours

A. 96 *Semester hours of Dean's academic core courses to include the following core substitutes:*

Required Core Substitute		Substitutes for
ECE 231	Differential Equations with Circuit Applications I	ECE 315
Math 356	Probability and Statistics for Engineers and Scientists	Math 300
Aero Engr 241, Engr 311, or Mech Engr 312	Aero-Thermodynamics, Electrical Power, or Thermodynamics	Energy/System Option

B. *5 Semester hours of Director of Athletics courses.*

C. *3 Semester hours of Academy Option.*

D. *36 Semester hours of major's courses:*

1. Engr Option (Engr Options may be from the same or different academic departments)

2. Engr Option
3. Engr Option
4. Engr Option
5. Engr Option
6. Engr Option
7. Engr Option
8. Engr Option
9. Engr/Bas Sci Option (See Supplemental Information)
10. Engr/Bas Sci Option (See Supplemental Information)
11. Math 243 (or Math 253)/Math 340
12. Math 245

Supplemental Information:

1. An Engineering Option is any course taught by the Engineering Division not used to satisfy any other requirement. There is no required distribution of courses from each department.

2. The Engineering/Basic Science Option is any course taught by the Basic Science or Engineering Divisions not used to satisfy any other curriculum requirement. Additionally, Geo 351 (Introduction to Physical Geography), and Geo 353 (Geomorphology) may be used to satisfy this option.

SUGGESTED COURSE SEQUENCE

General Engineering Major

	4°	hrs	per	3°	hrs	per	2°	hrs	per	1°	hrs	per
	For Lang 1	3	2	Math 243	3	1	Engr Option #3	3	1	Engr Option #6	3	1
	Beh Sci 110	3	1	**Engr Mech 220**	3	1	Engr Option #4	3	1	Engr Option #7	3	1
Fall	**History 100**	3	1	**Econ 201**	3	1	Engr/Bas Sci Option #1	3	1	Engr/Bas Sci Option #2	3	1
	Math 141	3	1	**Physics 215**	3	2	**Biology 315**	3	2	**MSS 415/416**	3	1
	Comp Sci 110	3	1	**English 211**	3	1	**Beh Sci 310**	3	1	**Soc Sci 412**	3	1
	Phy Ed	0.5	2	**Pol Sci 211**	3	1	**ECE 231**	3	1	*Phy Ed*	1	2
		15.5	8	*Phy Ed*	1	2	*Phy Ed*	0.5	2		16	7
					19	9		18.5	9			
	For Lang 2	3	2	Math 245	3	1	Engr Option #5	3	1	Engr Option #8	3	1
	Chem 100	3	2	Engr Option #1	3	1	**Philos 310**	3	1	***Academy Option***	3	1
Spring	**Engr 101**	3	1	Engr Option #2	3	1	**Aero Engr 315**	3	1	**English 411**	3	1
	English 111	3	1	**Chem 200**	3	2	**Math 356**	3	1	**Astro Engr 410**	3	1
	Math 142	3	1	**MSS 200**	3	1	**History 300**	3	1	**Mgt 400**	3	1
	Physics 110	3	2	**Law 220**	3	1	**S/T Energy Sys Option**	3	1	*Phy Ed*	0.5	2
	Phy Ed	0.5	2	*Phy Ed*	0.5	2	*Phy Ed*	0.5	2		15.5	7
		18.5	11		18.5	9		18.5	8			

Course Unit Summary
Core (32)
Major (12)
Academy Option (1)
Phy Ed (10)

Semester Hour Summary		
Core =	**96.0**	Sem Hours
Major =	36.0	"
Academy Option =	3.0	"
Phy Ed =	5.0	"
Total =	**140.0**	"

HUMANITIES

THE HUMANITIES MAJOR AT A GLANCE: The Humanities major is a divisional major requiring 140 semester hours for graduation. The major includes courses from the Departments of English and Fine Arts, Foreign Languages, History, Military & Strategic Studies, and Philosophy. A wide variety of elective options allows students the flexibility to tailor the major to individual interests. In addition, the divisional options make the major ideal for students who wish to minor in either Foreign Language, Philosophy, or Religion Studies.

Humanities majors confront fundamental questions of human existence. They enhance their reasoning ability, as well as their writing and speaking skills, by developing proficiency in critical and creative thought through an exploration of the ideas embodied in great works of Western thought, literature, and art. The Humanities major prepares cadets for graduate study and for a wide variety of career fields.

COURSE REQUIREMENTS: 140 Semester Hours

D. 96 *Semester hours of Dean's academic core courses to include the following core substitutes:*

Core Substitute		Substitutes for
Geo 310	Geospatial Information Analysis	System Option

B. *5 Semester hours of Director of Athletics courses.*

C. *3 Semester hours of Academy Option.*

D. *36 Semester hours of major's courses:*

1.-2. Divisional Requirements (choose 2):
   a. any literature course taught by DFENG for which the prerequisites are met
   b. any 300- or 400-level non-core course offered by DFH
   c. any Military & Strategic Studies Option (any 300- or 400-level non-core course offered by DFMI).

3. Fine Arts Option (choose 1):
   a. Fine Art 352, Art in History
   b. Fine Art 358, Music in History

4. Philosophy Requirement. Any 300- or 400- level non-core Philosophy course agreed upon by the Philosophy department. Philos 391/2/3/4: Philosophy history and topics courses are pre-approved for this requirement.

5. Research Methods and Critical Enquiry requirement (choose one):
   a. English 341

b. MSS 379
c. History 230
d. Hum 200
e. Pol Sci 300*

6.-10. Humanities Divisional Options: Choose five courses offered by the Humanities Division and the departments within the division.

11-12. Foreign Language III and IV

*Pol Sci 300 only fulfills this requirement for former FAS majors.

SUGGESTED COURSE SEQUENCE

Humanities Major

	4°	hrs	per	3°	hrs	per	2°	hrs	per	1°	hrs	per
	For Lang 1	3	2	For Lang 3	3	1	Divisional Requirement	3	1			
	Beh Sci 110	3	1	**MSS 200**	3	1	Fine Arts Option	3	1	Divisional Option	3	1
Fall	**History 100**	3	1	**Engr Mech 220**	3	1	**Biology 315**	3	2	Divisional Option	3	1
	Math 141	3	1	**Econ 201**	3	1	**Philos 310**	3	1	Divisional Option	3	1
	Comp Sci 110	3	1	**Physics 215**	3	2	**Beh Sci 310**	3	1	***Academy Option***	3	1
	Phy Ed	0.5	2	**Pol Sci 211**	3	1	**ECE 315**	3	1	**MSS 415/416**	3	1
		15.5	8	*Phy Ed*	1	2	*Phy Ed*	1	2	*Phy Ed*	0.5	2
					19	9		19	9		15.5	7
	For Lang 2	3	2	For Lang 4	3	1	Philos 391/2/3/4	3	1			
	Chem 100	3	2	**History 300**	3	1	Divisional Requirement	3	1	Divisional Option	3	1
Spring	**Engr 101**	3	1	**Geo 310**	3	1	Research Methods	3	1	**Soc Sci 412**	3	1
	English 111	3	1	**Law 220**	3	1	Divisional Option	3	1	**English 411**	3	1
	Math 142	3	1	**Chem 200**	3	2	**Math 300**	3	1	**Astro Engr 410**	3	1
	Physics 110	3	2	**English 211**	3	1	**Aero Engr 315**	3	1	**Mgt 400**	3	1
	Phy Ed	0.5	2	*Phy Ed*	0.5	2	*Phy Ed*	0.5	2	*Phy Ed*	0.5	2
		18.5	11		18.5	9		18.5	8		15.5	7

Course Unit Summary
Core (32)
Major (12)
Academy Option (1)
Phy Ed (10)

Semester Hour Summary		
Core =	**96.0**	Sem Hours
Major =	36.0	"
Academy Option =	3.0	"
Phy Ed =	5.0	"
Total =	**140.0**	"

SOCIAL SCIENCES

THE SOCIAL SCIENCES MAJOR AT A GLANCE: Social sciences deal with human behavior in its social and cultural aspects. At the Air Force Academy, the following disciplines are within the social sciences: Economics, Geospatial Science, Management, Law, Political Science, and Behavioral Sciences. Additionally, courses offered by Military & Strategic Studies can also be used to fulfill *some* of the major's requirements.

The major in Social Sciences is designed for the cadet whose interests and abilities lie in a broader program of study than a single disciplinary major would provide. The Social Sciences major requires completion of at least one course, as indicated below, in Economics, Management, Law, Political Science, and Behavioral Sciences. More concentrated study in one discipline is possible through the use of the Social Science Divisional Options (any course(s) from the social science disciplines *in addition* to Military & Strategic Studies.).

Flexibility in course selection is one advantage of this major. A specialized graduate degree in a particular discipline would be an option after graduation.

COURSE REQUIREMENTS: 140 Semester hours

A. 96 *Semester hours of Dean's academic core courses.*

B. *5 Semester hours of Director of Athletics courses.*

C. *3 Semester hours of Academy Option.*

D. *36 Semester hours of additional major's courses:*

1. Social Sciences Breadth Elective #1 (any non-core Econ course)
2. Social Sciences Breadth Elective #2 (any non-core Beh Sci course)
3. Social Sciences Breadth Elective #3 (any non-core Law course)
4. Social Sciences Breadth Elective #4 (any non-core Mgt course)
5. Social Sciences Breadth Elective #5 (any non-core Pol Sci course)
6. Social Sciences Depth Elective #1
7. Social Sciences Depth Elective #2
8. Social Sciences Depth Elective #3
9. Social Sciences Depth Elective #4
10. Academic Division Option

11.-12. Foreign Language III and IV

Supplemental Information:

1. Mgt 423 (Managerial Economics), taught by DFEG, may satisfy a Mgt or Econ requirement.

2. Soc Sci 420 (Law and Economics), taught by DFEG and DFL, may satisfy a Law or Econ

requirement

3. Soc Sci 483 (Negotiation and Mediation Processes), taught by DFL, DFM, and DFBL, may satisfy a Beh Sci, Law, or Mgt requirement.

4. Pol Sci 423 (War Crimes, Genocide, and Human Rights), taught by DFPS, DFH, and DFL, may satisfy a Pol Sci or Law requirement.

Course -- may satisfy Soc Sci breadth elective for either/or

	Econ	Beh Sci	Law	Mgt	Pol Sci
Mgt 423	X			X	
Soc Sci 420	X		X		
Soc Sci 483		X	X	X	
Pol Sci 423			X		X

5. Any FAS course may satisfy one social science depth elective.

6. Depth Electives: Select any four non-core courses from any department within the Social Sciences division or from Military & Strategic Studies in any combination or concentration.

7. Academic Division Option: Any three semester hour graded course taught at USAFA.

SUGGESTED COURSE SEQUENCE

Social Sciences Major

	4°	hrs	per	3°	hrs	per	2°	hrs	per	1°	hrs	per
Fall	For Lang 1	3	2	For Lang 3	3	1	Breadth Option 2	3	1			
	Beh Sci 110	3	1	Breadth Option 1	3	1	Breadth Option 3	3	1	Depth Option 2	3	1
	History 100	3	1	Engr Mech 220	3	1	Biology 315	3	2	Depth Option 3	3	1
	Math 141	3	1	Econ 201	3	1	Philos 310	3	1	Depth Option 4	3	1
	Comp Sci 110	3	1	Physics 215	3	2	Beh Sci 310	3	1	*Academy Option*	3	1
	Phy Ed	0.5	2	Pol Sci 211	3	1	ECE 315	3	1	MSS 415/416	3	1
		15.5	8	*Phy Ed*	1	2	*Phy Ed*	1	2	*Phy Ed*	0.5	2
					19	9		19	9		15.5	7
Spring	For Lang 2	3	2	For Lang 4	3	1	Breadth Option 4	3	1			
	Chem 100	3	2	MSS 200	3	1	Breadth Option 5	3	1	Academic Division Optic	3	1
	Engr 101	3	1	Sys Opt	3	1	Depth Option 1	3	1	Soc Sci 412	3	1
	English 111	3	1	Law 220	3	1	History 300	3	1	English 411	3	1
	Math 142	3	1	Chem 200	3	2	Math 300	3	1	Astro Engr 410	3	1
	Physics 110	3	2	English 211	3	1	Aero Engr 315	3	1	Mgt 400	3	1
	Phy Ed	0.5	2	*Phy Ed*	0.5	2	*Phy Ed*	0.5	2	*Phy Ed*	0.5	2
		18.5	11		18.5	9		18.5	8		15.5	7

Course Unit Summary
Core (32)
Major (12)
Academy Option (1)
Phy Ed (10)

Semester Hour Summary		
Core =	**96.0**	Sem Hours
Major =	36.0	"
Academy Option =	3.0	"
Phy Ed =	5.0	"
Total =	**140.0**	"

CHAPTER 10

DISCIPLINARY AND INTERDISCIPLINARY MAJORS AND MINORS

MAJOR/MINOR
Aeronautical Engineering
Astronautical Engineering
Behavioral Science
Biology
Chemistry
Civil Engineering
Computer Engineering
Computer Science
Economics
Electrical Engineering
English
Environmental Engineering
Foreign Area Studies
Foreign Language Minor
Geospatial Science
History
Legal Studies
Management
Mathematics
Mechanical Engineering
Meteorology
Military & Strategic Studies
Operations Research
Philosophy Major / Minor
Physics
Political Science
Religion Studies Minor
Space Operations
Systems Engineering

AERONAUTICAL ENGINEERING

THE AERONAUTICAL ENGINEERING MAJOR AT A GLANCE: Successful completion of the Aeronautical Engineering major leads to the degree of Bachelor of Science in Aeronautical Engineering, and prepares cadets for a wide variety of Air Force assignments in research and development, testing, and operations in the discipline. The Aeronautical Engineering major is accredited by the Engineering Accreditation Commission of ABET, http://www.abet.org.

To ensure the success of our graduates, we prepare them to attain *Program Educational Objectives* two to five years after graduation. These are:

1) Recognition as successful Air Force officers through demonstration of their ability to:
   a. Rapidly acquire required knowledge.
   b. Lead others effectively.
   c. Effectively apply ethical and moral standards.
   d. Improve unit performance by application of organizational skills.
   e. Make sound decisions based on critical thinking.
   f. Communicate effectively.
2) Selection for career training on, or ahead of, schedule, and for a progression of assignments of increasing responsibility.
3) A demonstrated ability to solve Air Force technical problems.
4) Success in continuing education.

The foundation that prepares graduates for attaining the *Program Educational Objectives* is provided by *Student Outcomes*. *Student Outcomes* describe what students must attain prior to graduation. These relate to the skills, knowledge, and behaviors that students acquire as they progress through the program. These *Student Outcomes* are:

1) an ability to apply knowledge of mathematics, science, and engineering
2) an ability to design and conduct experiments, as well as to analyze and interpret data
3) an ability to design a system, component, or process to meet desired needs within realistic constraints such as economic, environmental, social, political, ethical, health and safety, manufacturability, and sustainability
4) an ability to lead and function on multidisciplinary teams
5) an ability to identify, formulate, and solve engineering problems
6) an understanding of professional and ethical responsibility
7) an ability to communicate effectively both written and orally
8) the broad education necessary to understand the impact of engineering solutions in a military, global, economic, environmental, and societal context
9) a recognition of the need for, and an ability to engage in life-long learning
10) a knowledge of contemporary issues
11) an ability to use the techniques, skills, and modern engineering tools necessary for engineering practice

In the Aeronautical Engineering major, studies in aerodynamics, flight mechanics, propulsion,

aircraft structures, and experimental methods prepare cadets to succeed in either of the two-course design sequences, aircraft design or aircraft engine design.

Interested cadets are required to declare the Aeronautical Engineering major no later than the registration deadline in their third semester. However, late declarations or transfers to this major may be allowed at the beginning of the 2nd class year provided cadets have completed the following courses before enrolling: Math 243 (or Math 253), Math 245, Physics 215, Aero Engr 241, Aero Engr 315, and ECE 231. Cadets interested in the Aeronautical Engineering major are encouraged to discuss issues and concerns with an academic advisor or the Department of Aeronautics Advisor-In-Charge.

COURSE REQUIREMENTS: 146 Semester Hours

A. *96 Semester hours of Dean's academic core courses to include the following core substitutes:*

Required Core Substitute		**Substitutes for**
Aero Engr 210	Fundamentals of Aeronautics	Aero Engr 315
Aero Engr 241	Aero-Thermodynamics	Systems Option
Math 356	Probability and Statistics for Engineers and Scientists	Math 300
ECE 231	Differential Equations with Circuit Applications I	ECE 315
Core Replacement		**Replaces**
Aero Engr 481	Introduction to Aircraft and Propulsion System Design	Mgt 400

B. *5 Semester hours of Director of Athletics core courses.*

C. *3 Semester hours of Academy Option (Aero Engr Elective for accreditation requirements).*

D. *42 Semester hours of major's courses:*

1. Math 243 (or Math 253) Calculus III (or Advanced Placed Calculus III)
2. Math 245 Differential Equations
3. Math 346 Engineering Math
4. Engr Mech 320 Dynamics
5. Engr Mech 330 Mechanics of Deformable Bodies
6. Aero Engr 341 Aeronautical Fluid Mechanics
7. Aero Engr 342 Computational Aerodynamics
8. Aero Engr 351 Aircraft Performance and Static Stability
9. Aero Engr 352 Aircraft Dynamic Stability and Control
10. Aero Engr 361 Propulsion I
11. Structures and Materials Elective (select one from the five courses listed below)
    a. Engr Mech 332 Analysis and Design of Aerospace Structure
    b. Engr Mech 350 Mechanical Behavior of Materials (recommended for cadets in the propulsion track)
    c. Engr Mech 431 Introduction to Finite Element Analysis
    d. Aero Engr 436 Aeroelasticity
    e. Engr Mech 450 Aerospace Composite Materials
12. Aero Engr 442 Advanced Aerodynamics

13. Aero Engr 471 Aeronautics Laboratory
14. Design Elective (select one from the two courses listed below)
    a. Aero Engr 482 Aircraft Design
    b. Aero Engr 483 Aircraft Engine Design

Supplemental Information:

1. The Aero Engr Elective must come from the list of courses below and must not have been used previously to satisfy the Structures and Materials or Design electives: (electives are offered based on need and availability – see your advisor for details)

Aero Engr 436	Aeroelasticity
Aero Engr 446	Introduction to Hypersonics
Aero Engr 447	Advanced Applied Aerodynamics
Aero Engr 456	Flight Test Techniques (dept approval required)
Aero Engr 457	Aircraft Feedback Control Systems
Aero Engr 466	Propulsion II (required for cadets in the propulsion track)
Mech Engr 467	Energy Conversion
Aero Engr 472	Advanced Computational Dynamics
Aero Engr 482	Aircraft Design
Aero Engr 483	Aircraft Engine Design
Engr Mech 431	Introduction to Finite Element Analysis
Engr Mech 450	Aerospace Composite Materials
Aero Engr 495	Special Topics (3 sem hrs only, dept approval required)
Aero Engr 499	Independent Study (3 sem hrs only, dept approval required)

Other Engineering or Basic Science courses with dept approval.

SUGGESTED COURSE SEQUENCE

Aeronautical Engineering Major

	4°	hrs	per	3°	hrs	per	2°	hrs	per	1°	hrs	per
	For Lang 1	3	2	Math 243	3	1	Aero Engr 341	3	1	Aero Engr 442	3	1
	Beh Sci 110	3	1	**Aero Engr 210/315**	3	1	Aero Engr 351	3	1	Aero Engr 471	3	2
Fall	**History 100**	3	1	**Engr Mech 220**	3	1	Math 346	3	1	Structures Elective	3	1
	Math 141	3	1	**Econ 201**	3	1	Engr Mech 320	3	1	**Biology 315**	3	2
	Comp Sci 110	3	1	**Physics 215**	3	2	**History 300**	3	1	**Aero Engr 481**	3	2
	Phy Ed	0.5	2	**Pol Sci 211**	3	1	**English 211**	3	1	**Soc Sci 412**	3	1
		15.5	8	*Phy Ed*	1	2	*Phy Ed*	1	2	*Phy Ed*	0.5	2
					19	9		19	8		18.5	11
	For Lang 2	3	2	Math 245	3	1	Aero Engr 342	3	2	Aero Design Elective	3	2
	Chem 100	3	2	**Sys Opt Aero Engr 241**	3	1	Aero Engr 352	3	1	***Acad Opt A. E. Elec***	3	1
Spring	**Engr 101**	3	1	**MSS 200**	3	1	Aero Engr 361	3	1	**MSS 415/416**	3	1
	English 111	3	1	**Law 220**	3	1	Engr Mech 330	3	1	**Philos 310**	3	1
	Math 142	3	1	**Chem 200**	3	2	**Math 356**	3	1	**English 411**	3	1
	Physics 110	3	2	**ECE 231**	3	1	**Beh Sci 310**	3	1	**Astro Engr 410**	3	1
	Phy Ed	0.5	2	*Phy Ed*	0.5	2	*Phy Ed*	0.5	2	*Phy Ed*	0.5	2
		18.5	11		18.5	9		18.5	9		18.5	9

Course Unit Summary
Core (32)
Major (14)
Academy Option (1)
Phy Ed (10)

Semester Hour Summary		
Core =	**96.0**	Sem Hours
Major =	42.0	"
Academy Option =	3.0	"
Phy Ed =	5.0	"
Total =	**146.0**	"

ASTRONAUTICAL ENGINEERING

THE ASTRONAUTICAL ENGINEERING MAJOR AT A GLANCE: The major in Astronautical Engineering is the broad application of science and engineering to aerospace operations. Special emphasis is placed on astrodynamics, aerospace systems design, and control systems. Thus, the cadet is prepared for Air Force duty with specialization in research, design, development and analysis of space technology and aerospace avionics. Cadets who successfully complete this major are awarded the degree of Bachelor of Science in Astronautical Engineering, accredited by the Engineering Accreditation Commission of ABET, http://www.abet.org.

Interested cadets should declare the Astronautical Engineering major no later than the registration deadline in their second semester. However, in the event that you are late declaring the Astronautical Engineering major, you must discuss the transfer with an academic advisor from the Department of Astronautics. In any event, the course outline shown herein reflects the sequence of required major's courses that you must take. Please see an academic advisor or the Department of Astronautics Advisor-In-Charge to establish your specific course sequence.

To ensure the success of our graduates, we prepare them to attain *Program Educational Objectives* two to five years after graduation. These are:

1) Recognition as successful Air Force officers through demonstration of their ability to:
   a. Rapidly acquire required knowledge.
   b. Lead others effectively.
   c. Effectively apply ethical and moral standards.
   d. Improve unit performance by application of organizational skills.
   e. Make sound decisions based on critical thinking.
   f. Communicate effectively.
2) Selection for career training on, or ahead of, schedule, and for a progression of assignments of increasing responsibility.
3) A demonstrated ability to solve Air Force technical problems.
4) Success in continuing education.

The foundation that prepares graduates for attaining the *Program Educational Objectives* is provided by *Student Outcomes*. *Student Outcomes* describe what students must attain prior to graduation. These relate to the skills, knowledge, and behaviors that students acquire as they progress through the program. These *Student Outcomes* are:

1) an ability to apply knowledge of mathematics, science, and engineering
2) an ability to design and conduct experiments, as well as to analyze and interpret data
3) an ability to design a system, component, or process to meet desired needs within realistic constraints such as economic, environmental, social, political, ethical, health and safety, manufacturability, and sustainability
4) an ability to lead and function on multidisciplinary teams
5) an ability to identify, formulate, and solve engineering problems
6) an understanding of professional and ethical responsibility

7) an ability to communicate effectively both written and orally
8) the broad education necessary to understand the impact of engineering solutions in a military, global, economic, environmental, and societal context
9) a recognition of the need for, and an ability to engage in life-long learning
10) a knowledge of contemporary issues
11) an ability to use the techniques, skills, and modern engineering tools necessary for engineering practice

Incorporated within these outcomes, astronautical engineering majors must demonstrate a knowledge of orbital mechanics, space environment, attitude determination and control, telecommunication, space structures, and rocket propulsion. In addition, graduates must also demonstrate design competence that includes integration of astronautical engineering topics.

COURSE REQUIREMENTS: 149 Semester Hours

A. *96 Semester hours of Dean's academic core courses to include the following core substitutes:*

Required Core Substitute		**Substitutes for**
Aero Engr 241	Aero-Thermodynamics	Systems Option
Astro Engr 210	Introduction to Astronautics	Astro Engr 410
Math 356	Probability and Statistics for Engineers and Scientists	Math 300
ECE 231	Differential Equations with Circuit Applications I	ECE 315
Core Replacement		**Replaces**
Astro Engr 437	Small Spacecraft Engineering II (fulfills Astro Sys Engr Design Option II)	Mgt 400

B. *5 Semester hours of Director of Athletics core courses.*

C. *3 Semester hour Academy Option (Astro Engr Depth course for accreditation requirements).*
(See Supplemental Information 1)

D. *45 Semester hours of major's courses:*

1. Math 243 (or Math 253)	Calculus III (or Advanced Placed Calculus III)
2. Math 245	Differential Equations
3. Math 346	Engineering Math
4. Engr Mech 320	Dynamics
or Physics 355	Classical Mechanics
5. Engr Mech 330	Mechanics of Deformable Bodies
6. Engr 341	Linear Systems Analysis and Design
7. Engr 342	Linear Control System Analysis and Design
8. Astro Engr 201	Technology Skills for Astronautics
or Comp Sci 211	(See Supplemental Information 2)
9. Astro Engr 321	Intermediate Astrodynamics
10. Astro Engr 331	Space Systems Engineering
11. Astro Engr 351	Rocket Propulsion
12. ECE 446	Applied Communications Systems
13. Astro Engr 445	Spacecraft Attitude Dynamics and Control

14. Space Environment Option (See Supplemental Information 3)
15. Astro Sys Engr Design Option I (See Supplemental Information 4)

Supplemental Information:

1. The Academy Option for the Astro Engr major is a depth course in Astronautical Engineering. Choose one of the following courses not used to fulfill another requirement.

Astro Engr 422 (S)	Advanced Astrodynamics
Astro Engr 423 (F)	Space Mission Design
Astro Engr 495	Special Topics
Astro Engr 543 (S)	Methods of Optimization for Engineers
Engr 443 (F)	Advanced Control Theory and Design

2. Astronautical Engineering majors may take Comp Sci 211 in lieu of Astro Engr 201.

3. Space Environment Option:

Chem 325 (F)	Space Chemistry
Physics 370 (F)	Upper Atmospheric and Geo-Space Physics

Any other appropriate course from the Basic Science Division dealing with the near Earth space environment with Department Head approval.

4. Astro Systems Engineering Design Option (two course sequence when combined with the core replacement for Mgt 400). Choose one of the following course combinations:

a. Astro Engr 436 (F) Small Spacecraft Engineering I
   Astro Engr 437 (S) Small Spacecraft Engineering II

b. Mgt 400 Management and Command
   One semester of capstone engineering design from any of the accredited majors in the Engineering Division with approval from both DFAS and appropriate Department Heads.

SUGGESTED COURSE SEQUENCE

Astronautical Engineering Major

	4°	hrs	per	3°	hrs	per	2°	hrs	per	1°	hrs	per
	For Lang 1	3	2	Math 243	3	1	Astro Engr 321	3	1	ECE 446	3	1
	Beh Sci 110	3	1	**MSS 200**	3	1	Engr 341	3	1	Astro Engr 445	3	1
Fall	**History 100**	3	1	**Engr Mech 220**	3	1	Math 346	3	1	Astro S E Design Opt I	4	2
	Math 141	3	1	**Law 220**	3	1	**History 300**	3	1	Space Environment Opt	3	1
	Comp Sci 110	3	1	**Physics 215**	3	2	**Pol Sci 211**	3	1	**Philos 310**	3	1
	Phy Ed	0.5	2	**English 211**	3	1	**Econ 201**	3	1	**Biology 315**	3	2
		15.5	8	*Phy Ed*	1	2	*Phy Ed*	1	2	*Phy Ed*	0.5	2
					19	9		19	8		19.5	10
				Astro Engr 201	1	1						
	For Lang 2	3	2	Math 245	3	1	Astro Engr 331	3	2	***Acad Opt Depth Opt***	3	1
	Chem 100	3	2	Engr Mech 320	3	2	Astro Engr 351	3	1	**Aero Engr 315**	3	1
Spring	**Engr 101**	3	1	**Sys Opt Aero Engr 241**	3	1	Engr 342	3	1	**MSS 415/416**	3	1
	English 111	3	1	**Astro Engr 210**	3	1	Engr Mech 330	3	1	**Soc Sci 412**	3	1
	Math 142	3	1	**Chem 200**	3	2	**Math 356**	3	1	**English 411**	3	1
	Physics 110	3	2	**ECE 231**	3	1	**Beh Sci 310**	3	1	**Astro S E Design Opt**	4	2
	Phy Ed	0.5	2	*Phy Ed*	0.5	2	*Phy Ed*	0.5	2	*Phy Ed*	0.5	2
		18.5	11		19.5	11		18.5	9		19.5	9

Course Unit Summary
Core (32)
Major (14)
Academy Option (1)
Phy Ed (10)

Semester Hour Summary		
Core =	**97.0**	Sem Hours
Major =	41.0	"
Academy Option =	3.0	"
Phy Ed =	5.0	"
Total =	**146.0**	"

NOTES:

1. Astro Engr 445 must be taken in the Fall semester.
2. All majors going on to graduate school are highly encouraged to take Astro Engr 543 as an Astro Depth option or as an additional course.

BEHAVIORAL SCIENCES

THE BEHAVIORAL SCIENCES MAJOR AT A GLANCE: No matter what you do in life, there is one irrefutable fact: you'll be working with other people. Therefore, your success in any field will depend largely on your understanding of yourself and others and your ability to work together. The Behavioral Sciences major lays the foundation for this understanding. Three academic options are offered in the major: Leadership Studies Option, which examines in depth the behavioral sciences approach to studying and developing leadership; Human Factors and Systems Design Option, which focuses on how people interact with the machines and systems they use; and the Behavioral Sciences Option, which allows students the opportunity to choose a diverse menu of courses to tailor their course of study to individual professional and educational goals.

The Behavioral Sciences curriculum is designed to provide all majors, regardless of option choice, a shared set of discipline-informed, Air Force relevant core competencies. The competency areas include:

- Knowledge:
  - Psychological Processes
  - Leadership
  - Socio-Cultural
  - Human Factors
- Research Methods
- Cultural Literacy
- Critical Thinking Skills
- Application of Content
- Values

REQUIRED COURSES: 146 Semester Hours

A. 96 *Semester hours of Dean's academic core courses.*

Required Core Substitute		Substitutes for
Beh Sci 332	Advanced Research Methods and Statistical Tools	Math 300

B. *5 Semester hours of Director of Athletics core courses.*

C. *3 Semester hours of Academy Option.*

D. *42 Semester hours of major's courses:*

1.-2. Foreign Language III and IV
3. Beh Sci 231 Basic Research Methods and Statistical Tools
4. Beh Sci 498 Senior Capstone

Behavioral Sciences Option: The Behavioral Sciences Option requires the completion of the core, two additional foreign language courses, plus 12 major's courses for a total of 146 semester hours. This option allows cadets to tailor an array of courses within the behavioral sciences, from a micro to a macro level. In addition to Beh Sci 231, Beh Sci 332, and Beh Sci 498, all Behavioral Sciences Option majors will be required to take:

From the attached table: 1 choice within each of the four Breadth groups (total of 4 courses), 1 choice from the Advanced Study courses, and 5 choices from among the Elective courses.
Note: no more than two non-Beh Sci courses (three allowed for pre-med program).

Within the Behavioral Sciences Option, majors have the choice to select a Concentration area (a recommended sequence of courses) which suits their interests and future goals.
Concentrations include:

Clinical/Counseling Psychology
Socio-Cultural Studies
Experimental Psychology
Pre-Med

The Pre-Med Concentration is a good choice for cadets aspiring to medical school; psychology is one of the top majors for students entering American medical schools. To be considered for medical school, these courses will also be required:

Chem 233 Organic Chemistry I
Chem 243 Organic Chemistry Lab
Chem 234 Organic Chemistry II
One other laboratory science course offered by the Department of Biology
(DFBL will count three pre-med courses toward the Behavioral Sciences Option. The following core substitutes are preferred for the pre-med track: Biology 210 and Chem 110. Coordinate with the Departments of Chemistry and Biology for additional registration information.)

Leadership Studies Option:

The Leadership Studies Option requires the completion of the core, two additional foreign language courses, plus 12 major's courses for a total of 146 semester hours. This option allows cadets an opportunity to examine in depth the area of leadership. In addition to Beh Sci 231, Beh Sci 332, and Beh Sci 498, all Leadership Studies majors must take:

Beh Sci 411 Contemporary Leadership Theory and Practice
Beh Sci 412 Leading and Measuring Organizational and Personal Change
Beh Sci 450 Advanced Topics in Leadership
From the attached table: 1 choice from each of the Experimental and Human Factors, Psychology, and Socio-Cultural Breadth groups, as well as 4 choices from among the Leadership Elective courses.
Note: no more than two non-Beh Sci courses

Human Factors and Systems Design Option:

The Human Factors and System Design Option requires the completion of the core, two additional foreign language courses, plus 12 major's courses for a total of 146 semester hours. In addition to Beh Sci 231, Beh Sci 332, and Beh Sci 498, all Human Factors and Systems Design Option majors must take:

Beh Sci 335 Learning and Memory
Beh Sci 373 Introduction to Human Factors Engineering
Beh Sci 375 Human Factors in Aviation Systems Engineering
Beh Sci 390 Sensation and Perception
Beh Sci 471 Engineering Psychology
Beh Sci 473 Human Factors Engineering in Systems Design

From the attached table: 1 choice from each of the Socio-Cultural, Leadership, and Psychology Breadth groups, as well as 1 additional choice from the Human Factors Elective courses.

SUGGESTED COURSE SEQUENCE

Behavioral Sciences Major

	4°	hrs	per	3°	hrs	per	2°	hrs	per	1°	hrs	per
	For Lang 1	3	2	For Lang 3	3	1	**Beh Sci 332**	3	1	Beh Sci Course	3	1
	Beh Sci 110	3	1	**MSS 200**	3	1	Beh Sci Course	3	1	Beh Sci Course	3	1
Fall	**History 100**	3	1	**Engr Mech 220**	3	1	Beh Sci Course	3	1	***Academy Option***	3	1
	Math 141	3	1	**Econ 201**	3	1	**Biology 315**	3	2	**S/T Energy Sys Opt**	3	1
	Comp Sci 110	3	1	**Physics 215**	3	2	**Beh Sci 310**	3	1	**MSS 415/416**	3	1
	Phy Ed	0.5	2	**Pol Sci 211**	3	1	**ECE 315**	3	1	**Soc Sci 412**	3	1
		15.5	8	*Phy Ed*	1	2	*Phy Ed*	1	2	*Phy Ed*	0.5	2
					19	9		19	9		18.5	8
	For Lang 2	3	2	For Lang 4	3	1	Beh Sci Course	3	1	Beh Sci Course	3	1
	Chem 100	3	2	Beh Sci 231	3	1	Beh Sci Course	3	1	Beh Sci Course	3	1
Spring	**Engr 101**	3	1	Beh Sci Course	3	1	**Philos 310**	3	1	Beh Sci Course	3	1
	English 111	3	1	**Law 220**	3	1	**History 300**	3	1	**English 411**	3	1
	Math 142	3	1	**Chem 200**	3	2	Beh Sci Course	3	1	**Astro Engr 410**	3	1
	Physics 110	3	2	**English 211**	3	1	**Aero Engr 315**	3	1	**Mgt 400**	3	1
	Phy Ed	0.5	2	*Phy Ed*	0.5	2	*Phy Ed*	0.5	2	*Phy Ed*	0.5	2
		18.5	11		18.5	9		18.5	8		18.5	8

Course Unit Summary
Core (32)
Major (14)
Academy Option (1)
Phy Ed (10)

Semester Hour Summary		
Core =	**96.0**	Sem Hours
Major =	42.0	"
Academy Option =	3.0	"
Phy Ed =	5.0	"
Total =	**146.0**	"

NOTE: Beh Sci 310 should be taken 2˚ fall.

Behavioral Sciences' Tracks Table for Advisor Use				
		Behavioral Sciences	**Leadership Studies**	**Human Factors & Systems Design**
		Bolded courses required	***Bolded courses required***	***Bolded courses required***
Required for all options:		**231 Res Method/Stats (S, 3*)** **332 Adv Res Methods (F, 2*)**	**231 Res Method/Stats (S, 3*)** **332 Adv Res Methods (F, 2*)**	**231 Res Method/Stats (S, 3*)** **332 Adv Res Methods (F, 2*)**
		Choose 1 from each breadth	***Choose 1 from each breadth***	***Choose 1 from each breadth***
Breadth	**Experimental & Human Factors**	335 Learning & Memory (F/S) 370 Cognitive Psychology (F) 373 Intro to HF Engineering (F/S) 375 HF in Aviation Sys Engr (F) 390 Sensation and Perception (S)	335 Learning & Memory (F/S) 370 Cognitive Psychology (F) 373 Intro to HF Engineering (F/S) 375 HF in Aviation Sys Engr (F) 390 Sensation and Perception (S)	370 Cognitive Psychology (F) **335 Learning & Memory (F/S)** **373 Intro to HF Engineering (F/S)** **375 HF in Aviation Sys Engr (F)** **390 Sensation and Perception (S)**
	Psychology	330 Abnormal Psychology (F) 352 Social Psychology (S) 355 Biopsychology (F) 380 Theories of Personality (F)	330 Abnormal Psychology (F) 352 Social Psychology (S) 355 Biopsychology (F) 380 Theories of Personality (F)	330 Abnormal Psychology (F) 352 Social Psychology (S) 355 Biopsychology (F) 380 Theories of Personality (F)
	Social-Cultural	358 Military and Society (F) 360 Sociology (S)	358 Military and Society (F) 360 Sociology (S)	358 Military and Society (F) 360 Sociology (S)
	Leadership	411 Cont Leadership Theory (S) **310 pre-req* 412 Lead/Measuring Change (F)**310 pre-req*	**411 Cont Leadership Theory (S, 2*)** **412 Lead/Measuring Change (F, 1*)**	411 Cont Leadership Theory (S) 412 Lead/Measuring Change (F)
		Choose one course from the <u>Adv Study</u> (Human Factors takes 2 adv studies) ***Capstone required for all options without Dept Head approval***		
Depth	**Advanced Study**	362 Class, Race, Gender and Sexuality (F) **358 or 360 pre-req* 411 Cont Leadership Theory (S) **310 pre-req* 412 Lead/Measuring Change (F) **310 pre-req* 440 Lifespan Development (S) 450 Adv Topics in Leadership (S)**411 or 412 pre-req* 471 Engineering Psychology (F) **373 pre-req* 473 HF Engr in Sys Design (S) **471 pre-req* 495 Special Topics	**450 Adv Topics in Leadership (S, 1*)** -	**471 Engineering Psychology (F)** **473 HF Engr Sys Design (S)** -
Integration	**Capstone**	**498 Senior Seminar (S, 1*)**	**498 Senior Seminar (S, 1*)**	**498 Senior Seminar (S, 1*)** -

		Choose 5 courses from the list <u>below or to the right</u>	***Choose 4 courses from the list <u>below</u>***	***Choose 1 course from the list <u>below</u>***
		(No more than 2 non-Beh Sci without Dept Head approval unless pre-med)	***(No more than 2 non-Beh Sci)***	
Choice	**Elective(s)**	*Any Beh Sci Course (s) not taken* *Any Foreign Language >or=322* Bio 363 Genetics (F) - *premed option under academy option, F/S, S 2* or earlier* Bio 410 Anat/Phys: Sensory (F)- *premed option under academy option, S 2* or earlier* Bio 440 Anat/Phy: Visceral (S) - p*remed option under academy option, S 2* or earlier* Chem 233 Organic Chemistry I (F) - *premed required F, 2* (Chem 243 is co-req)* Chem 234 Organic Chemistry II (S) - *premed required - option under academy option S, 2** Chem 243 Organic Chemistry Lab (F) - *premed required F, 2* (Chem 233 is co-req)* English 380 Race, Gen, Class (F/S) Hist 340 Colonial L. America (F) Hist 341 Modern L. America (S) Hist 342 Traditional Asia (F) Hist 343 Modern Asia (S) Hist 373 Sub-Saharan Africa (F) Hist 374 Middle Eastern Hist (F) Hist 375 Modern M. E. History (S) Pol Sci 473 Politics of Asia (F) Pol Sci 475 Politics of L. America (F) Pol Sci 477 Politics of the M. E. (F) Pol Sci 479 Sub-Saharan Africa (F) Beh Sci 499 Independent Study (F/S) - *preapproval required*	*Any Beh Sci Course (s) not taken* English 370 Speech Comm (F/S) Mgt 303 Management Persp (F) Mgt 345 Human Managerial I (F) Mgt 361 Human Managerial II (S) Phil 311 War, Morality, & Mil Prof (F/S) Hist 483 Great Americans (S, even) Soc Sci 483 Prin of Negotiation (F/S) 499 Independent Study -leadership related (F/S) -*preapproval required*	355 Biopsychology (F) 370 Cognitive Psychology (F) Bio 320 Biomechanics (S) Bio 345 Aero Physiology (F) SysEngr 470 Human Sys Integ (S) **Department approval for pre-req* SysEngr 301 Program Management (S) SysEngr 310 Systems Engineering (F/S) **Engr 101 pre-req* 499 Independent Study - leadership related (F/S) - *preapproval required*

BIOLOGY

THE BIOLOGY MAJOR AT A GLANCE: Are you interested in what makes your body function? Are you fascinated by the vast diversity of living organisms on this planet? Does the idea of decoding a strand of DNA interest you? If so, then the Biology major is for you. This major is designed to promote the development of the cadet's natural scientific talents through a carefully planned program of academic instruction, practical laboratory experience, and individual research projects. The Biology major provides a multidisciplinary approach to the study of human performance in air and space, exercise, biomechanics, environmental sciences, and cutting-edge cell and genetic engineering. Some cadets pursue specialized areas of interest such as aviation and flight, human factors in aviation and space, athletics and sports performance, ecology, cell and molecular biology, or professional or advanced degree preparation. The Biology major is also very flexible; cadets are not limited to a specific area of study and are free to tailor a program to meet their own interests. The Biology major can complement many careers in the Air Force, or prepare you for a career in the health professions (such as medicine or dentistry) or in the Biomedical Sciences Corps (including aerospace physiology, bioenvironmental engineering, and physical therapy). Contact the Health Professions or BSC Advisor in the Department of Biology for more information.

The Department of Biology strongly urges all cadets considering the Biology major to enroll in Chem 100 and Chem 110 in their 4° year. Biology 210 is a required core alternate for Biology majors and should be taken by the fall semester of the 3° year. This allows for a more balanced scheduling of upper-level major's courses. However, if you are transferring into the Biology major from another major, you can still complete a Biology major in two years. See a Biology academic advisor for suggested course sequence. Biology 210/315 may be validated if a cadet has received a 4 or 5 on the AP Biology Exam or a 6 or 7 on the IB Biology Exam, or has previously taken the equivalent of Biology 210/315 at another college and received a B or better in the course(s). See the Biology AIC for additional information on Biology 210/315 validation.

COURSE REQUIREMENTS: 146 Semester hours

A. *96 Semester hours of Dean's academic core courses to include the following core substitute:*

Required Core Substitute		Substitutes for
Biology 210	Paradigms in Biology with Laboratory	Biology 315
Math 356	Probability and Statistics for Engineers and Scientists	Math 300

B. *5 Semester hours of Director of Athletics core courses.*

C. *3 Semester hours of Academy Option.*

D. *24 Semester hours of major's courses to view the breadth, key concepts, and integration of biology:*

1. Biology 330 Zoology

2. Biology 331 Botany
3. Biology 332 Microbial Diversity
4. Biology 360 Cell and Molecular Biology
5. Biology 363 Genetics
6. Biology 380 Principles of Ecology
7. Biology 480 Biology Capstone Seminar
8. Human Physiology Option*

* The Human Physiology Option emphasizes an integrated view of living functions, primarily at the systems level and focused on human biology. Accepted courses are Biology 410 (Anatomy and Physiology: Sensory and Motor Integration), Biology 440 (Anatomy and Physiology: Visceral Systems Integration), and Biology 345 (Aerospace Physiology).

E. *18 Additional semester hours of majors courses. Certain optional courses are suggested for cadets wishing to emphasize or concentrate on different areas of biology. See your DFB academic advisor to discuss specific courses which take into account your natural talents, interests, and abilities.*

1. Biology Option #1 *
2. Biology Option #2 *
3. Biology Option #3 *
4. Chemistry Option: Chem 230 or Chem 233
5. Scientific Breadth Option #1**
6. Scientific Breadth Option #2**

* Biology Options can be filled by any course, 300-level or above, offered by the Biology Department. A maximum of one Organic Chemistry <u>or</u> Biochemistry course may fill a Biology option (only Chem 234, Chem 344, or Chem 434).

** The Scientific Breadth Options are designed to enhance understanding of biological science, broaden scientific vision, or link biological science to related Air Force career areas. These options can include any 200-level or above course in the Departments of Biology, Chemistry, Physics, Computer Science, and Mathematical Sciences, the select courses listed below, or other courses with Department Head approval. With Department Head approval, Biology majors wishing to pursue a Foreign Language minor may substitute 200-level or above Foreign Language courses for their Scientific Breadth Options to facilitate earning the minor.

Beh Sci 355	Biopsychology
Beh Sci 373	Introduction to Human Factors Engineering
Beh Sci 440	Lifespan Development
Civ Engr 362	Introduction to Environmental Engineering
Civ Engr 368	Ground and Surface Water Hydrology and Contaminant Transport
Civ Engr 369	Introduction to Air Pollution
Civ Engr 463	Wastewater Treatment Plant Design
Civ Engr 467	Water Treatment Principles and Design

Geo 250	Human Geography: A Global Cultural Awareness
Geo 351	Introduction to Physical Geography
Geo 353	Geomorphology
Geo 382	Remote Sensing and Imagery Analysis
Philos 330	Introduction to the Philosophy of Science
Philos 410	Medical Ethics

AREAS OF INTEREST The Biology major can meet a wide variety of cadet interests, some of which are listed below. However, the major is designed to be flexible to each cadet's interest, allowing each cadet to *tailor a program* unique to their own biological interests.

A. Environmental and Organismal Biology: Combines general knowledge of Biology, the physical world (chemistry, meteorology, geology, geospatial science, physics), the human element (politics, economics, and behavior), and problem-solving skills (engineering and mathematics) to understand man's role and impact on the planet Earth. Suggested courses: Vertebrate Zoology, Microbiology, Applied Ecology, Environmental Chemistry, Biochemistry, Fundamental Hydraulics, Introduction to Environmental Engineering, and numerous Geospatial Science courses.

Bioenvironmental Engineering
Application of engineering and scientific knowledge and techniques to identify and manage risks for health protection, to develop procedures, techniques, and equipment, to conduct and supervise engineering services, and to participate in medical-facility programs. Suggested courses: Microbiology, Introduction to Environmental Engineering, Hazardous Waste Management, Ground and Surface Water Hydrology and Contaminant Transport, Introduction to Air Pollution, Wastewater Treatment Plant Design, Water Treatment Principles and Design, Organic Chemistry Laboratory, Biochemistry, and Molecular Biology Methods.

B. Cellular and Molecular Biology: Combines the study of biochemical and cellular-level processes to understand the rapidly growing fields of genetic engineering, immunology, disease defense, hormonal control, aging, and cancer. Suggested courses: Microbiology, Molecular Biology Methods, Organic Chemistry, and Biochemistry.

C. Human Biology: Comprises the study of human anatomy and physiology. There are various avenues of study within this sub-discipline:

Human Factors and Performance
Plan of elective courses can be tailored to student interests in the physical, physiological, mechanical, and psychological factors related to the man-machine interface (human factors) or to optimizing and teaching neuromuscular skills (performance, athletics). Suggested courses: Biomechanics, Aerospace Physiology, Anatomy and Physiology: Sensory and Motor Integration, Aviation Psychology, Introduction to Human Factors Engineering, Biopsychology, and Engineering Psychology.

Aerospace Physiology

Management of aerospace-physiological training and hyperbaric-therapy units, performance of research, and provision of expertise on the human aspects of manned high-altitude/high-speed flight (including space flight). Suggested courses: Aerospace Physiology, Anatomy and Physiology: Sensory and Motor Integration, Anatomy and Physiology: Visceral Systems Integration, Human Nutrition, and Exercise Physiology.

Physical Therapy
Direct form of professional patient care that can be applied to patients referred from most disciplines of medicine. Required courses: Anatomy and Physiology: Sensory and Motor Integration, Anatomy and Physiology: Visceral Systems Integration, and Lifespan Development. Suggested courses: Biomechanics and Exercise Physiology.

D. Professional or Advanced Degree: This track is designed for cadets pursuing graduate school or a professional health degree. Specific courses should be coordinated with your academic advisor.

SCHEDULING CONSIDERATIONS: The Biology major is designed to be flexible, allowing cadets to design a program that most meets their interest in biology. There are several course options that offer flexibility to cadets building their schedule.

SUGGESTED COURSE SEQUENCE

Biology Major

	4°	hrs	per	3°	hrs	per	2°	hrs	per	1°	hrs	per
	For Lang 1	3	2	Chem 230	3	1	Biology 331	3	2	Biology 380	3	1
	Chem 100	3	2	**Biology 210**	3	2	Biology 332	3	1	Human Phys Option	3	1
Fall	**History 100**	3	1	**Econ 201**	3	1	Biology 363	3	2	Biology Option #2	3	1
	Math 141	3	1	**Physics 110**	3	2	**Philos 310**	3	1	***Academy Option***	3	1
	Comp Sci 110	3	1	**English 211**	3	1	**Beh Sci 310**	3	1	**MSS 415/416**	3	1
	Phy Ed	0.5	2	**Pol Sci 211**	3	1	**ECE 315**	3	1	**Soc Sci 412**	3	1
				Phy Ed	1	2	*Phy Ed*	1	2	*Phy Ed*	0.5	2
		15.5	9		19	10		19	10		18.5	8
	For Lang 2	3	2	Biology 330	3	2	Biology 360	3	1	Biology 480	3	1
	Beh Sci 110	3	1	**Engr Mech 220**	3	1	Sci Breadth Option #1	3	1	Biology Option #3	3	1
Spring	**Chem 110**	3	2	**Law 220**	3	1	Biology Option #1	3	1	Sci Breadth Option #2	3	1
	Engr 101	3	1	**S/T Energy Sys Option**	3	1	**Aero Engr 315**	3	1	**English 411**	3	1
	English 111	3	1	**MSS 200**	3	1	**History 300**	3	1	**Astro Engr 410**	3	1
	Math 142	3	1	**Physics 215**	3	2	**Math 356**	3	1	**Mgt 400**	3	1
	Phy Ed	0.5	2	*Phy Ed*	0.5	2	*Phy Ed*	0.5	2	*Phy Ed*	0.5	2
		18.5	10		18.5	10		18.5	8		18.5	8

Course Unit Summary
Core (32)
Major (14)
Academy Option (1)
Phy Ed (10)

Semester Hour Summary		
Core =	**96.0**	Sem Hours
Major =	42.0	"
Academy Option =	3.0	"
Phy Ed =	5.0	"
Total =	**146.0**	"

CHEMISTRY

THE CHEMISTRY MAJOR AT A GLANCE: From developing the materials employed in the F-22, the Joint Strike Fighter, or extending the life of our aircraft fleet to understanding space sensor and satellite technology to analyzing chemical and biological warfare data, chemistry is at the forefront of Air Force research. The majors in chemistry are recommended for those who are interested in chemical, biochemical, or advanced materials research and applications. They provide fundamental knowledge in analytical, biological, inorganic, organic, and physical chemistry and allow the cadet to select a specialized degree track for in-depth study. The majors in chemistry emphasize the use of the laboratory methods for reinforcement of lecture material and individual research projects. All three American Chemical Society approved majors prepare cadets for a junior officer position in research, development, or graduate training. A junior officer may be assigned to Air Force Labs such as the High Explosive Research and Development Facility (HERD), the Directed Energy Lab, or the Propulsion Directorate. Additionally, cadets graduating with one of the chemistry majors are very competitive for medical school, dental school, bioenvironmental engineering, pilot, navigator, aircraft maintenance, intelligence, and a host of other operational and support career fields.

All cadets interested in the medical career fields or a science major to include the Chemistry, Materials Chemistry, Biochemistry, and Biology majors must enroll in Chem 100 in the 4° fall, followed by Chem 110 in the 4° spring to allow proper sequencing for accreditation and medical school application timelines. Cadets should declare one of the American Chemical Society approved Chemistry majors prior to the fall semester of their third-class year. Cadets can still complete one of the Chemistry majors if they declare in the fall of their third-class year, however course sequencing will not be ideal. Cadets with validation credit will have the opportunity to take additional courses in the major or in other disciplines of their choice. To discuss the Chemistry major, contact the DFC advisor-in-charge at 333-2960.

COURSE REQUIREMENTS: 146 Semester hours

A. *96 Semester hours of Dean's academic core courses to include the following core substitutes:*

Required Core Substitute		Substitutes for
Chem 335	Physical Chemistry I	Systems Option
Math 356	Probability and Statistics for Engineers and Scientists	Math 300

B. *5 Semester hours of Director of Athletics core courses.*

C. *3 Semester hours Academy Option (possible major's course for accreditation requirements).*

D. *42 Semester hours of major's courses:*

The major's options are Chemistry, Biochemistry, and Materials Chemistry. Depending on the number and type of course validation(s), majors courses may be moved into the fourth-class year (i.e., Math 243 and/or Chem 222). Biology 210 is a recommended core substitute for Biology 315 for Biochemistry majors, but is not required.

Certification/Qualification for Project Engineer (62G)
In addition to the three major options, expansion upon the core curriculum's engineering background may lead to consideration of any chemistry major for award of the Project Engineer (62G) Air Force Specialty Code (AFSC), with approval of the Engineering Division. Interested cadets must complete two additional engineering courses that must meet the following criteria; (1) both courses will be from the same discipline, (2) both courses will be 300/400 equivalent (as determined by the discipline's department head) and (3) requires their discipline's core course as a prerequisite. Below are the recommended follow-on courses that have been selected by discipline that meet these criteria.

DFAS	DFAN	DFEM	DFEC	DFCE
Astro Engr 210 (core sub)	Aero Engr 361 (Aero Engr 241 is a prereq)	Engr Mech 340	ECE 231 (core sub)	Civ Engr 362
Astro Engr351	Aero Engr 466	Engr Mech 440	ECE 332	One of the following:
Astro Engr 436 or Astro Engr 331			ECE 321 or ECE 281	Civ Engr 463
Astro Engr 436			ECE 382	Civ Engr 467
				Civ Engr 468

* If a major in materials chemistry is earned, the cadet automatically meets these criteria.

Chemistry Course Sequence
The Chemistry track is the most flexible track offered by DFC, allowing a broader spectrum of in-depth studies. Cadets successfully completing this academic program are awarded the degree of Bachelor of Science in Chemistry.

1. Math 243 (or Math 253) Calculus III (or Advanced Placed Calculus III)
2. Chem 222 Analytical Chemistry
3. Chem 233 Organic Chemistry I
4. Chem 234 Organic Chemistry II
5. Chem 243 Organic Chemistry Laboratory
6. Chem 336 Physical Chemistry II
7. Chem 344 Integrated Laboratory A
8. Chem 431 Theoretical Inorganic Chemistry
9. Chem 444 Integrated Laboratory B
10. Chem 445 Advanced Laboratory Techniques
11. Chem 481 Biochemistry I
12. Chem Concentration 1*
13. Chem Concentration 2*
14. Chem Concentration 3*
15. Chem 499** Independent Study

*Chem Concentrations consist of one course from EACH of the following: any Basic Sciences

300-/400-level course; any Chem 400-level course; and a three-hour Chem 300-/400-level laboratory course. A maximum of six hours of Chem 499 may be counted toward the major.

**Chem 499 is the major's capstone course and can only be replaced by exception with Department Head approval. Chem 499 may fill the Academy Option for accreditation requirements.

Biochemistry Course Sequence

Biochemistry investigates the rapidly changing arena where chemistry, biochemistry, and molecular and cell biology interrelate. This provides an excellent foundation in the sciences for those interested in medical school or research fields, such as medicinal chemistry, biopolymers, biosensors, and nanoscience. Cadets successfully completing this option are awarded the degree of Bachelor of Science in Biochemistry.

1. Math 243 (or Math 253)	Calculus III (or Advanced Placed Calculus III)
2. Chem 222	Analytical Chemistry
3. Chem 233	Organic Chemistry I
4. Chem 234	Organic Chemistry II
5. Chem 243	Organic Chemistry Laboratory
6. Chem 336	Physical Chemistry II
7. Chem 344	Integrated Laboratory A
8. Chem 431	Theoretical Inorganic Chemistry
9. Chem 445	Advanced Laboratory Techniques
10. Chem 481	Biochemistry I
11. Chem 482	Biochemistry II
12. Chem 491	Biochemistry Laboratory
13. Biology Option 1	
14. Biology Option 2	
15. Chem 499**	Independent Study

*The Biology Options must be two of the following: Biology 360, Biology 363, Biology 410, Biology 431, Biology 440, or Biology 464. Biology 360 is strongly recommended.

**Chem 499 is the major's capstone course and can only be replaced by exception with Department Head approval. Chem 499 may fill the Academy Option for accreditation requirements.

Materials Chemistry Course Sequence

Materials Chemistry is an interdisciplinary program designed to meet the Air Force's need for qualified personnel with an understanding of modern materials, such as composites, ceramics, polymers, alloys, semiconductors, superconductors, and nanomaterials. This course of study bridges the gap between designing and developing materials at the molecular level and the physical application of these materials at the macro level for structural, electronic, and optical uses. To investigate this relatively new field of study we have taken advantage of a wide range of expertise found at the Air Force Academy. Cadets who successfully complete this option are awarded the degree of Bachelor of Science in Materials Chemistry.

1.	Math 243 (or Math 253)	Calculus III (or Advanced Placed Calculus III)
2.	Chem 222	Analytical Chemistry
3.	Chem 233	Organic Chemistry I
4.	Chem 234	Organic Chemistry II
5.	Chem 243	Organic Chemistry Laboratory
6.	Chem 336	Physical Chemistry II
7.	Chem 431	Theoretical Inorganic Chemistry
8.	Chem 481	Biochemistry I
9.	Chem 440	Polymer Chemistry
10.	Chem 444	Integrated Laboratory B
11.	Chem 445	Advanced Laboratory Techniques
12.	Chem 465	Chemistry of Advanced Materials
13.	Engr Mech 340	Materials Science for Engineers
14.	Engr Mech 440	Physical Metallurgy
15.	Chem 499**	Independent Study

**Chem 499 is the major's capstone course and can only be replaced by exception with Department Head approval. Chem 499 may fill the Academy Option for accreditation requirements.

SUGGESTED COURSE SEQUENCE

Chemistry Major

	4°	hrs	per	3°	hrs	per	2°	hrs	per	1°	hrs	per
Fall	**For Lang 1**	3	2	Math 243	3	1	Chem 222	3	2	Chem 431	3	1
	Beh Sci 110	3	1	Chem 233	3	1	**S/T E/S Opt Chem 335**	3	1	Chem 444	3	2
	History 100	3	1	Chem 243	3	2	**Biology 315**	3	2	Chem 481	3	1
	Math 141	3	1	**Physics 110**	3	2	**Philos 310**	3	1	**English 411**	3	1
	Chem 100	3	2	**English 211**	3	1	**Beh Sci 310**	3	1	**MSS 415/416**	3	1
	Phy Ed	0.5	2	**Pol Sci 211**	3	1	**ECE 315**	3	1	**Soc Sci 412**	3	1
		15.5	9	*Phy Ed*	1	2	*Phy Ed*	1	2	*Phy Ed*	0.5	2
					19	10		19	10		18.5	9
Spring	**For Lang 2**	3	2	Chem 234	3	1	Chem 336	3	1	Chem 445	3	2
	Comp Sci 110	3	1	**Econ 201**	3	1	Chem 344	3	2	Chem Conc #2	3	1
	Engr 101	3	1	**Law 220**	3	1	Chem Conc #1	3	1	Chem Conc #3	3	2
	English 111	3	1	**Engr Mech 220**	3	1	**Aero Engr 315**	3	1	***Acad Opt*** *Chem 499*	3	0
	Math 142	3	1	**MSS 200**	3	1	**History 300**	3	1	**Astro Engr 410**	3	1
	Chem 110	3	2	**Physics 215**	3	2	**Math 356**	3	1	**Mgt 400**	3	1
	Phy Ed	0.5	2	*Phy Ed*	0.5	2	*Phy Ed*	0.5	2	*Phy Ed*	0.5	2
		18.5	10		18.5	9		18.5	9		18.5	9

Course Unit Summary
Core (32)
Major (14)
Academy Option (1)
Phy Ed (10)

Semester Hour Summary		
Core =	**96.0**	Sem Hours
Major =	42.0	"
Academy Option =	3.0	"
Phy Ed =	5.0	"
Total =	**146.0**	"

Biochemistry Major

	4°	hrs	per	3°	hrs	per	2°	hrs	per	1°	hrs	per
	For Lang 1	3	2	Math 243	3	1	Chem 222	3	2	Chem 431	3	1
	Beh Sci 110	3	1	Chem 233	3	1	**S/T E/S Opt Chem 335**	3	1	Chem 481	3	1
Fall	**History 101**	3	1	Chem 243	3	2	**Biology 315**	3	2	Biology Option #2	3	2
	Math 141	3	1	**Physics 110**	3	2	**Philos 310**	3	1	**English 411**	3	1
	Chem 100	3	2	**English 211**	3	1	**Beh Sci 310**	3	1	**MSS 415/416**	3	1
	Phy Ed	0.5	2	**Pol Sci 211**	3	1	**ECE 315**	3	1	**Soc Sci 412**	3	1
		15.5	9	*Phy Ed*	1	2	*Phy Ed*	1	2	*Phy Ed*	0.5	2
					19	10		19	10		18.5	9
	For Lang 2	3	2	Chem 234	3	1	Chem 336	3	1	Chem 445	3	2
	Comp Sci 110	3	1	**Econ 201**	3	1	Chem 344	3	2	Chem 482	3	1
Spring	**Engr 101**	3	1	**Law 220**	3	1	Biology Option #1	3	1	Chem 491	3	2
	English 111	3	1	**Engr Mech 220**	3	1	**Aero Engr 315**	3	1	***Acad Opt*** *Chem 499*	3	0
	Math 142	3	1	**MSS 200**	3	1	**History 302**	3	1	**Astro Engr 410**	3	1
	Chem 110	3	2	**Physics 215**	3	2	**Math 356**	3	1	**Mgt 400**	3	1
	Phy Ed	0.5	2	*Phy Ed*	0.5	2	*Phy Ed*	0.5	2	*Phy Ed*	0.5	2
		18.5	10		18.5	9		18.5	9		18.5	9

Course Unit Summary
Core (32)
Major (14)
Academy Option (1)
Phy Ed (10)

Semester Hour Summary		
Core =	**96.0**	Sem Hours
Major =	42.0	"
Academy Option =	3.0	"
Phy Ed =	5.0	"
Total =	**146.0**	"

Materials Chemistry Major

	4°	hrs	per	3°	hrs	per	2°	hrs	per	1°	hrs	per
	For Lang 1	3	2	Math 243	3	1	Chem 222	3	2	Chem 431	3	1
	Beh Sci 110	3	1	Chem 233	3	1	**S/T E/S Opt Chem 335**	3	1	Chem 481	3	1
Fall	**History 100**	3	1	Chem 243	3	2	**Biology 315**	3	2	Chem 444	3	2
	Math 141	3	1	**Physics 110**	3	2	**Philos 310**	3	1	Engr Mech 440	3	2
	Chem 100	3	2	**English 211**	3	1	**Beh Sci 310**	3	1	**English 411**	3	1
	Phy Ed	0.5	2	**Pol Sci 211**	3	1	**ECE 315**	3	1	**Soc Sci 412**	3	1
		15.5	9	*Phy Ed*	1	2	*Phy Ed*	1	2	*Phy Ed*	0.5	2
					19	10		19	10		18.5	10
	For Lang 2	3	2	Chem 234	3	1	Chem 336	3	1	Chem 445	3	2
	Comp Sci 110	3	1	**Econ 201**	3	1	Chem 440	3	2	Chem 465	3	2
Spring	**Engr 101**	3	1	**Law 220**	3	1	Engr Mech 340	3	1	***Acad Opt*** *Chem 499*	3	0
	English 111	3	1	**Engr Mech 220**	3	1	**Aero Engr 315**	3	1	**MSS 415/416**	3	1
	Math 142	3	1	**MSS 200**	3	1	**History 300**	3	1	**Astro Engr 410**	3	1
	Chem 110	3	2	**Physics 215**	3	2	**Math 356**	3	1	**Mgt 400**	3	1
	Phy Ed	0.5	2	*Phy Ed*	0.5	2	*Phy Ed*	0.5	2	*Phy Ed*	0.5	2
		18.5	10		18.5	9		18.5	9		18.5	9

Course Unit Summary
Core (32)
Major (14)
Academy Option (1)
Phy Ed (10)

Semester Hour Summary		
Core =	**96.0**	Sem Hours
Major =	42.0	"
Academy Option =	3.0	"
Phy Ed =	5.0	"
Total =	**146.0**	"

NOTES:

1. Cadets indicating an interest in Chemistry, Biology, or a Pre-Med track will be identified during the BCT chemistry placement exam. That information, along with other placement data, will allow those interested cadets to be placed into Chem 100, or advance placed into Chem 110, in the fall semester of their 4° year. Regardless of academic interests, highly

qualified cadets may be advanced placed into Chem 110 in the fall semester of their 4° year.

2. Cadets with validation/transfer credit, who are interested in attending medical school, are encouraged to take additional coursework to enhance their preparation for medical school. In addition to suggested courses in biology, such as those listed under the Biology Options for the Biochemistry major, cadets should consider enrolling in Philos 410, Medical Ethics.

3. Cadets completing Chem 100 in the 4° fall and interested in declaring Chemistry, Biology, or pursuing a Pre-Med track will be placed into Chem 110 in the 4° spring. Depending on validation credit, cadets taking Chem 110 in their 4° spring may have to delay a 100-level core course to the 3° fall.

4. Depending on validation credit, cadets declaring a Chemistry major at the beginning of the 3° year will benefit from a summer academic course to allow proper sequencing of major's courses.

CIVIL ENGINEERING

THE CIVIL ENGINEERING MAJOR AT A GLANCE: Civil engineering is one of the broadest of the engineering disciplines, encompassing many interdependent technical specialties. As a civil engineer, you plan, design, and supervise the construction of a wide variety of facilities such as space stations and launching facilities, offshore structures, bridges, buildings, tunnels, highways, transit systems, dams, airports, irrigation projects, distribution facilities for water, and collection and treatment facilities for wastewater and hazardous wastes.

You will use technology's newest applications. Civil engineers are leading users of state-of-the-art computer methods in design, construction, project scheduling, and cost control. Civil engineers are problem solvers, meeting the challenges of pollution, a deteriorating infrastructure, traffic congestion, energy needs, floods, earthquakes, sustainable development, and community planning. As you develop your skills, you can move into engineering management, oversee the completion of entire projects, and work closely with architects, owners, contractors, government officials, and others involved in all aspects of construction.

What is Civil Engineering like in the Air Force? Like the civil engineering profession, the Air Force civil engineering career field is also broad, including architects, electrical engineers, and mechanical engineers, as well as civil engineers. Typically, an Air Force civil engineering officer can expect to work at both base and command level jobs. The civil engineer at base level is responsible for the sustainable construction and maintenance of all facilities; mechanical, electrical, and waste disposal systems; hazardous waste management, runways, and roads. Accordingly, Air Force civil engineering requires many specialties. Your tasks may include technical design, project planning and programming, and possibly managing the maintenance work force of civilian and military personnel. At the command level, your expertise is required to plan, manage, and direct the civil engineering efforts on a command-wide basis.

If you like science and mathematics and are curious about how things work, then perhaps civil engineering is the major for you. The Civil Engineering major is accredited by the Engineering Accreditation Commission of ABET, http://www.abet.org. Upon graduation you earn a Bachelor of Science in Civil Engineering, a BSCE. A graduate with a Civil Engineering degree is eligible for a civil engineer, general engineer, bioenvironmental engineer, developmental engineer, or flying Air Force Specialty Code.

To ensure the success of our graduates, we prepare them to attain *Program Educational Objectives* two to five years after graduation. These are:

1) Recognition as successful Air Force officers through demonstration of their ability to:
   a. Rapidly acquire required knowledge.
   b. Lead others effectively.
   c. Effectively apply ethical and moral standards.
   d. Improve unit performance by application of organizational skills.
   e. Make sound decisions based on critical thinking.
   f. Communicate effectively.

2) Selection for career training on, or ahead of, schedule, and for a progression of assignments of increasing responsibility.
3) A demonstrated ability to solve Air Force technical problems.
4) Success in continuing education.
5) Success in contingency operations.

The foundation that prepares graduates for attaining the *Program Educational Objectives* is provided by *Student Outcomes*. *Student Outcomes* describe what students must attain prior to graduation. These relate to the skills, knowledge, and behaviors that students acquire as they progress through the program. These *Student Outcomes* are:

1) an ability to apply knowledge of mathematics, science, and engineering
2) an ability to design and conduct experiments, as well as to analyze and interpret data
3) an ability to design a system, component, or process to meet desired needs within realistic constraints such as economic, environmental, social, political, ethical, health and safety, manufacturability, and sustainability
4) an ability to lead and function on multidisciplinary teams
5) an ability to identify, formulate, and solve engineering problems
6) an understanding of professional and ethical responsibility
7) an ability to communicate effectively both written and orally
8) the broad education necessary to understand the impact of engineering solutions in a military, global, economic, environmental, and societal context
9) a recognition of the need for, and an ability to engage in life-long learning
10) a knowledge of contemporary issues
11) an ability to use the techniques, skills, and modern engineering tools necessary for engineering practice

Incorporated within these outcomes, civil engineering majors must demonstrate a knowledge of fundamental concepts of civil engineering commonly applied to solve the types of complex, multidisciplinary problems they will face as Air Force civil engineers. In addition, graduates must also demonstrate design competence that includes integration of construction processes.

COURSE REQUIREMENTS: 146 Semester hours

A. *96 Semester hours of Dean's academic core courses to include the following core substitutes:*

Required Core Substitute		**Substitutes for**
Engr 311	Electrical Power	Systems Option
Math 356	Probability and Statistics for Engineers and Scientists	Math 300
ECE 231	Differential Equations with Circuit Applications I	ECE 315
Core Replacement		**Replaces**
Civ Engr 480	Project Management and Contract Administration	Mgt 400

B. *5 Semester hours of Director of Athletics core courses.*

C. *3 Semester hour Academy Option (Civ Engr Design Option for accreditation requirements).*

(See Supplemental Information 1)

D. *42 Semester hours of major's courses:*

1. Math 243	Calculus III or (Math 253, Math 344, Math 359)
2. Math 245	Differential Equations
3. Civ Engr 330	Elementary Structural Analysis
4. Civ Engr 351	Civil Engineering Practices - Field Engineering
5. Civ Engr 361	Fundamental Hydraulics
6. Civ Engr 362	Introduction to Environmental Engineering
7. Civ Engr 372	Behavior and Analysis of Structures
8. Civ Engr 373	Behavior and Design of Steel Members
9. Civ Engr 390	Introduction to Soil Mechanics
10. Civ Engr 474	Behavior and Design of Concrete Members
11. Civ Engr 488	Pavement Design and Transportation
12. Civ Engr 405	Civil Engineering Seminar
13. Design Option	(See Supplemental Information 1)
14. Engineering Option	(See Supplemental Information 2)
15. Basic Sci Option	(See Supplemental Information 3)

Supplemental Information:

1. Design Options (choose two from the following courses):

Civ Engr 463	Wastewater Treatment Plant Design
Civ Engr 464	Architectural Design
Civ Engr 467	Water Treatment Principles and Design
Civ Engr 468	Solid & Hazardous Waste Facilities Design
Civ Engr 469	Design of Air Pollution Controls
Civ Engr 473	Structural Design
Civ Engr 485	Construction Project Management
Civ Engr 491	Foundation Engineering
Civ Engr 492	Earth Structures: Embankments/Slopes/Buried Structures

2. An Engineering Option is any course of at least three semester hours taught by the Engineering Division that has not been used to satisfy another curriculum requirement.

3. For a Basic Science Option, any course taught by the departments listed below may satisfy this option.

Department of Biology
Department of Chemistry
Department of Mathematical Sciences
Department of Physics
Geo 351, Go 360, or Meteor 320 can satisfy this option.
Note: Although the Department of Computer Science is part of the Basic Sciences Division, Computer Science courses cannot be taken to fulfill this option.

SUGGESTED COURSE SEQUENCE

Civil Engineering Major

	4°	hrs	per	3°	hrs	per	2°	hrs	per	1°	hrs	per
	For Lang 1	3	2	Math 243	3	1	Civ Engr 361	3	1	Civ Engr 474	3	1
	Beh Sci 110	3	1	**English 211**	3	1	Civ Engr 372	3	1	Design Option	3	2
Fall	**Engr 101**	3	1	**Engr Mech 220**	3	1	Civ Engr 390	3	2	Basic Science Option	3	1
	Math 141	3	1	**Econ 201**	3	1	**Biology 315**	3	2	**Philos 310**	3	1
	Comp Sci 110	3	1	**Physics 215**	3	2	**ECE 231**	3	1	**Soc Sci 412**	3	1
	Phy Ed	0.5	2	**MSS 200**	3	1	**Beh Sci 310**	3	1	**English 411**	3	1
		15.5	8	*Phy Ed*	1	2	*Phy Ed*	1	2	*Phy Ed*	0.5	2
					19	9		19	10		18.5	9
	For Lang 2	3	2	Math 245	3	1	Civ Engr 362	3	1			
	Chem 100	3	2	Civ Engr 330	3	1	Civ Engr 373	3	1	Civ Engr 488	3	1
Spring	**History 100**	3	1	Engineering Option	3	1	**Sys Opt Engr 311**	3	1	***Acad Opt Design Opt***	3	1
	English 111	3	1	**Pol Sci 211**	3	1	**Aero Engr 315**	3	1	**MSS 415/416**	3	1
	Math 142	3	1	**Law 220**	3	1	**Math 356**	3	1	**Civ Engr 480**	3	2
	Physics 110	3	2	**Chem 200**	3	2	**History 300**	3	1	**Astro Engr 410**	3	1
	Phy Ed	0.5	2	*Phy Ed*	0.5	2	*Phy Ed*	0.5	2	*Phy Ed*	0.5	2
		18.5	11		18.5	9		18.5	8		15.5	8

Course Unit Summary
Core (32)
Major (14)
Academy Option (1)
Phy Ed (10)

Semester Hour Summary		
Core =	**96.0**	Sem Hours
Major =	39.0	"
Civ Engr 351 (summer)	3.0	"
Academy Option =	3.0	"
Phy Ed =	5.0	"
Total =	**146.0**	"

COMPUTER ENGINEERING

THE COMPUTER ENGINEERING MAJOR AT A GLANCE: Computer systems are an integral part of every aspect of Air Force operations. These systems range from embedded devices that perform a specific function in a weapon system to massively-parallel supercomputers used to simulate an air campaign. Because today's computing systems are so sophisticated computer engineering, has evolved. Computer engineers take a true 'systems' view toward computing design, combining the algorithm-design skills of a computer scientist with the hardware-design talents of an electrical engineer. Computer Engineering majors at USAFA acquire these skills through an interdisciplinary approach that intermingles courses from Computer Science with offerings from Electrical and Computer Engineering. This course mix provides the broad, varied background an engineer needs to succeed in this dynamic field.

To ensure the success of our graduates, we prepare them to attain *Program Educational Objectives* two to five years after graduation. These are:

1) Recognition as successful Air Force officers through demonstration of their ability to:
   a. Rapidly acquire required knowledge.
   b. Lead others effectively.
   c. Effectively apply ethical and moral standards.
   d. Improve unit performance by application of organizational skills.
   e. Make sound decisions based on critical thinking.
   f. Communicate effectively.
2) Selection for career training on, or ahead of, schedule, and for a progression of assignments of increasing responsibility.
3) A demonstrated ability to solve Air Force technical problems.
4) Success in continuing education.

The *Program Educational Objectives* listed above describe what graduates are expected to attain within a few years of graduation. To support these goals, our program's curriculum is designed such that, by graduation, our graduates possess certain qualities or outcomes. The *Student Outcomes* are listed below. Each Computer Engineering graduate shall demonstrate that they have attained the following outcomes:

1. an ability to apply knowledge of mathematics, science, and engineering
2. an ability to design and conduct experiments, as well as to analyze and interpret data
3. an ability to design a system, component, or process to meet desired needs within realistic constraints such as economic, environmental, social, political, ethical, health and
4. safety, manufacturability, and sustainability
5. an ability to function on multidisciplinary teams
6. an ability to identify, formulate, and solve engineering problems
7. an understanding of professional and ethical responsibility
8. an ability to communicate effectively

9. the broad education necessary to understand the impact of engineering solutions in a global, economic, environmental, and societal context
10. a recognition of the need for, and an ability to engage in life-long learning
11. a knowledge of contemporary issues
12. an ability to use the techniques, skills, and modern engineering tools necessary for engineering practice.

Cadets who successfully complete the Computer Engineering major are awarded a Bachelor of Science in Computer Engineering degree, accredited by the Engineering Accreditation Commission of ABET, http://www.abet.org. Computer Engineering is an excellent choice if you are interested in an advanced degree. As a computer engineer, your knowledge and skill will be in high demand in the AF and in society as a whole.

If considering Comp Engr, you need to take ECE, 210, ECE 231, and Comp Sci 210 in your 3° fall.

COURSE REQUIREMENTS: 146 semester hours

A. *96 Semester hours of Dean's academic core courses to include the following core substitutes:*

Required Core Substitute		**Substitutes for**
Ops Rsch 310	Systems Analysis	Systems Option
Math 356	Probability and Statistics for Engineers and Scientists	Math 300
ECE 231	Differential Equations with Circuit Applications I	ECE 315
Core Replacement		**Replaces**
ECE 463	Capstone Design Project I	Mgt 400

B. *5 Semester hours of Director of Athletics core courses.*

C. *3 Semester hours of Academy Option (Comp Engr Option #1 for accreditation requirements).* (See Supplemental Information 1)

D. *42 Semester hours of major's courses:*

1. Comp Sci 210 — Introduction to Programming
2. Comp Sci 220 — Data Abstraction
3. Comp Sci 483 — Operating Systems
4. ECE 210 — Principles of AF Electronic Systems
5. ECE 281 — Introductory Digital Systems
6. ECE 332 — Differential Equations with Circuit Applications II
7. ECE 321 — Electronics I
8. ECE 382 — Computer Architecture and Microcontrollers
9. ECE 383 — Microcomputer System Design I
10. Comp Engr Option #2 — ECE 484 Microcomputer System Design II or other (See Supplemental Information 1)
11. Comp Engr Option #3 — ECE 485 Computer Architecture (See Supplemental Information 1)

12. Math 340	Discrete Mathematics
13. ECE 464	Capstone Design Project II
14. Math/Sci Option	Any 200-, 300-, or 400-level Mathematics or Basic Science course where the prerequisites are met

Supplemental Information:

1. Elective options provide the opportunity for more in-depth study that will help prepare you for your career in the Air Force. They also help provide the foundation for your senior design project. ECE 463 and ECE 464 are the capstone courses of the Computer Engineering major. The Computer Engineering Program offers two different areas of study: **Embedded Systems** and **Cyber**. There is also a **Universal Area** that allows you to take any two Computer Engineering Options. **Comp Engr majors must take either ECE 484 (fall only) or ECE 485 (spring only) as either Comp Engr Option #2 or Comp Engr Option #3, respectively. Where ECE 484 (or 485) are not taken, fill with approved Comp Engr option.** Figure 10-1 shows suggested course flows for the various areas of study.

Area 1: Embedded Systems - This area of study explores advanced topics in computer design. Topics include: computer system design; microcomputer interfacing; computer architecture; and digital signal processing. Study in this area leads to a better understanding of building embedded systems for the multitude of avionics systems found in air, space, and cyberspace. It is well-suited for those planning to become an Air Force developmental engineer.

Area 2: Cyber - This area of study concentrates on information warfare skills. Topics include: computer networks, securing information assets, cryptography, and advance programming paradigms. Study in this area develops the skills needed to excel in the Air Force's cyber domain and is well-suited for those planning to become cyber space operators.

The following are Comp Engr options:

ECE 373	Digital VLSI Circuits
ECE 387	Introduction to Robotic Systems
ECE 434	Discrete-Time Signals and Systems
ECE 484	Microcomputer System Design II
ECE 485	Computer Architecture
ECE 495	Special Topics (Dept Head approval required)
ECE 499	Independent Study (Dept Head approval required)
Engr 311	Electrical Power
Sys Engr 460	Unmanned Aerial Vehicle (UAV) Systems
Comp Sci 359	Programming Paradigms
Comp Sci 431	Cryptography
Comp Sci 438	Computer Security and Information Warfare
Comp Sci 467	Computer Networks
Comp Sci 468	Network Security
Comp Sci 495	Special Topics in Computer Science

SUGGESTED COURSE SEQUENCE

Computer Engineering Major

	4°	hrs	per	3°	hrs	per	2°	hrs	per	1°	hrs	per
	For Lang 1	3	2	ECE 210	3	1	ECE 321	3	2	ECE Option #2	3	1
	Beh Sci 110	3	1	Comp Sci 210	3	2	ECE 382	3	1	Comp Sci 483	3	1
Fall	**History 100**	3	1	**ECE 231**	3	1	Math/Sci Option	3	1	**Ops Rsch 310**	3	2
	Math 141	3	1	**Engr Mech 220**	3	1	**English 211**	3	1	**Philos 310**	3	1
	Comp Sci 110	3	1	**Physics 215**	3	2	**Law 220**	3	1	**ECE 463**	3	1
	Phy Ed	0.5	2	**MSS 200**	3	1	**Math 356**	3	1	**English 411**	3	1
		15.5	8	*Phy Ed*	1	2	*Phy Ed*	1	2	*Phy Ed*	0.5	2
					19	10		19	9		18.5	9
	For Lang 2	3	2	Comp Sci 220	3	1	ECE 383	3	2	ECE Option #3	3	1
	Chem 100	3	2	ECE 281	3	1	Math 340	3	1	ECE 464	3	2
Spring	**History 101**	3	1	ECE 332	3	1	ECE Option #1	3	1	**Soc Sci 412**	3	1
	English 111	3	1	**Poli Sci 211**	3	1	**Biology 315**	3	2	**History 302**	3	1
	Math 142	3	1	**Econ 201**	3	2	**Aero Engr 315**	3	1	**MSS 400**	3	1
	Physics 110	3	2	**Chem 200**	3	1	**Beh Sci 310**	3	1	**Astro Engr 410**	3	1
	Phy Ed	0.5	2	*Phy Ed*	0.5	2	*Phy Ed*	0.5	2	*Phy Ed*	0.5	2
		18.5	11		18.5	9		18.5	10		18.5	9

Course Unit Summary
Core (32)
Major (14)
Academy Option (1)
Phy Ed (10)

Semester Hour Summary		
Core =	**96.0**	Sem Hours
Major =	42.0	"
Academy Option =	3.0	"
Phy Ed =	5.0	"
Total =	**146.0**	"

Figure 10-1

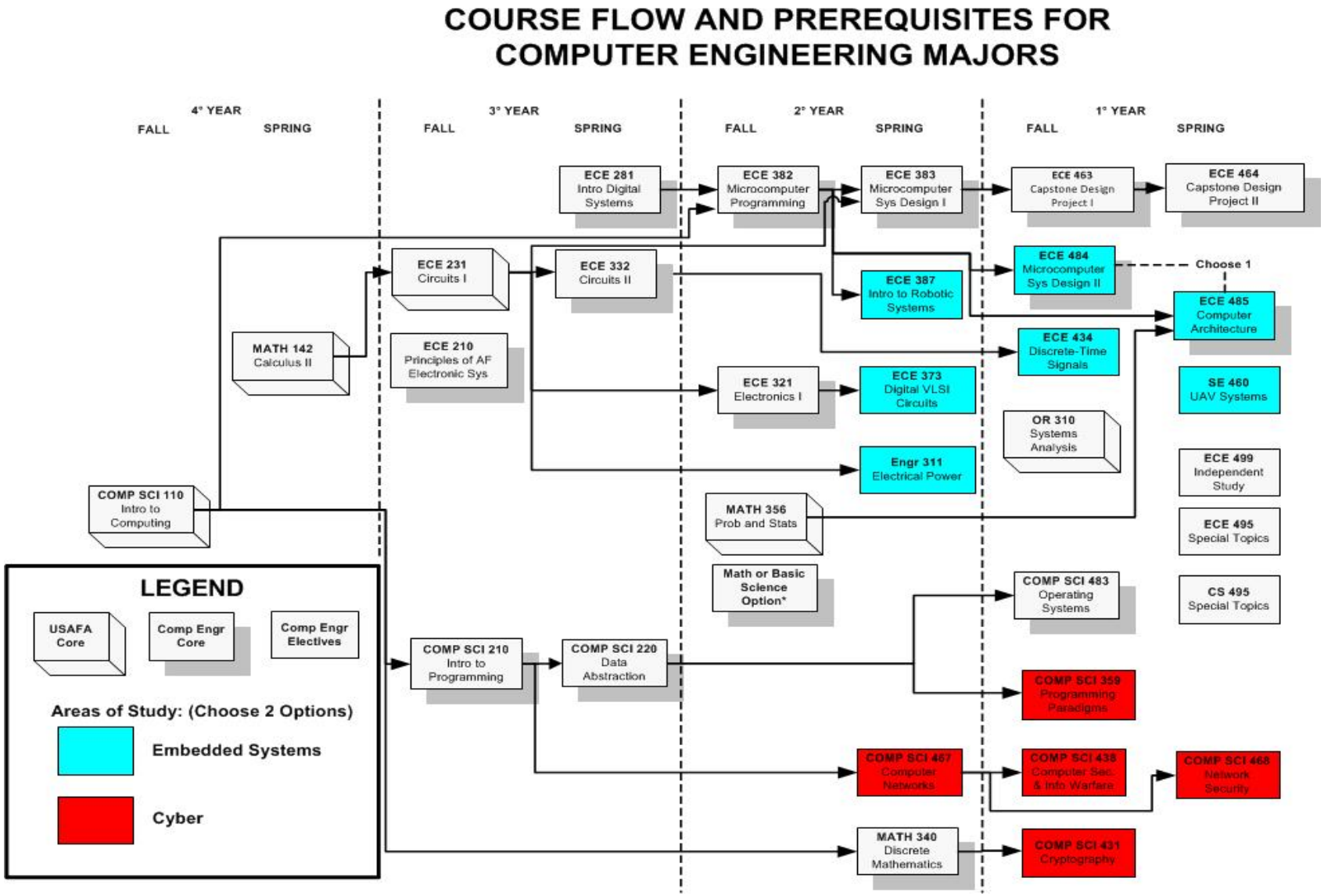
COURSE FLOW AND PREREQUISITES FOR COMPUTER ENGINEERING MAJORS
4° YEAR
FALL
SPRING
3° YEAR
FALL
SPRING
2° YEAR
FALL
SPRING
1° YEAR
FALL
SPRING
ECE 281 Intro Digital Systems
ECE 382 Microcomputer Programming
ECE 383 Microcomputer Sys Design I
ECE 463 Capstone Design Project I
ECE 464 Capstone Design Project II
ECE 231 Circuits I
ECE 332 Circuits II
ECE 387 Intro to Robotic Systems
ECE 484 Microcomputer Sys Design II
Choose 1
ECE 485 Computer Architecture
MATH 142 Calculus II
ECE 210 Principles of AF Electronic Sys
ECE 434 Discrete-Time Signals
ECE 321 Electronics I
ECE 373 Digital VLSI Circuits
SE 460 UAV Systems
OR 310 Systems Analysis
Engr 311 Electrical Power
ECE 499 Independent Study
COMP SCI 110 Intro to Computing
MATH 356 Prob and Stats
ECE 495 Special Topics
Math or Basic Science Option*
COMP SCI 483 Operating Systems
CS 495 Special Topics
LEGEND
USAFA Core
Comp Engr Core
Comp Engr Electives
COMP SCI 210 Intro to Programming
COMP SCI 220 Data Abstraction
COMP SCI 359 Programming Paradigms
Areas of Study: (Choose 2 Options)
Embedded Systems
Cyber
COMP SCI 467 Computer Networks
COMP SCI 438 Computer Sec. & Info Warfare
COMP SCI 468 Network Security
MATH 340 Discrete Mathematics
COMP SCI 431 Cryptography

COMPUTER SCIENCE

THE COMPUTER SCIENCE MAJOR AT A GLANCE: Computer Science is the study of computers and their application. The Computer Science major at USAFA focuses on compter programming, software engineering, computing theory, and cyber warfare. The skills and ablilities developed in the Computer Science major are in high demand and may be applied in all Air Force career fields. The Cyber Warfare option of the Computer Science major is particularly well-suited for cadets who want to become cyber operations officers.

Computer Science majors who become cyber operations officers will have opportunities to : conduct offensive and defensive cyber operations; establish and operate combat communications capabilities; operate, maintain, and defend computer and communications networks; provide command and control capabilities, and for operations; and contribute to the development and acquisition of new systems.

Computer Science majors who become pilots (including test pilots) will have greater insight into their aircraft and weapons systems which are highly dependent on software systems. They also may contribute to units by developing applications that improve mission effectiveness through areas such as operations support, data analysis, scheduling, and resource management.

Computer Science is a challenging major. Successful majors typically have strong quantitative and analytical skills and enjoy computer programming. Prior programming experience is neither assumed nor required for success in the major.

Graduates of the Computer Science program will have attained the following *Student Outcomes*:

1) An ability to apply knowledge of computing and mathematics appropriate to the discipline,
2) An ability to analyze a problem, and identify and define the computing requirements appropriate to the solution,
3) An ability to design, implement, and evaluate a computer-based system, process, component, or program to meet desired needs,
4) An ability to function effectively on teams to accomplish a common goal,
5) An understanding of professional, ethical, legal, security and social issues and responsibilities in computing in the Air Force,
6) An ability to communicate effectively with a range of audiences,
7) An ability to analyze the local and global impact of computing on individuals, organizations, and societies,
8) Recognition of the need for and an ability to engage in continuing professional development, both in computing and the Air Force,
9) An ability to use current techniques, skills, and tools necessary for computing practice,
10) An ability to apply mathematical foundations, algorithmic principles, and computer science theory in the modeling and design of computer-based systems in a way that demonstrates comprehension of the tradeoffs involoved in design choices, and

11) An ability to apply design and development principles in the construction of software systems of varying complexity.

Successful completion of the Computer Science major leads to the degree of Bachelor of Science in Computer Science.The The Computer Science program is accredited by the Computing Accreditation Commission of ABET, http://www.abet.org.

Computer Science majors must take Introduction to Programming (Comp Sci 210) in the fall of their 3-degree year. If you have any questions about the Computer Science major or career opportunities, please stop by the Computer Science department or call the Computer Science Advisor-in-Charge at 3-3590.

COURSE REQUIREMENTS: 146 Semester hours

A. *96 Semester hours of Dean's academic core courses to include the following core substitutes:*

Required Core Substitute		**Substitutes for**
Math 356	Probability and Statistics for Engineers and Scientists	Math 300
Comp Sci 453	Software Engineering I	Systems Option

B. *5 Semester hours of Director of Athletics core courses.*

C. *3 Semester hours of Academy Option (Comp Sci Option for accreditation requirements).*

D. *42 Semester hours of major's courses:*

1. Math 340 — Discrete Mathematics
2. Comp Sci 210 — Introduction to Programming
3. Comp Sci 220 — Data Abstraction
4. Comp Sci 351 — Computer Organization and Architecture
5. Comp Sci 359 — Programming Paradigms
6. Comp Sci 364 — Information Storage and Retrieval
7. Comp Sci 380 — Design and Analysis of Algorithms
8. Comp Sci 426 — Languages and Machines
9. Comp Sci 438 — Computer Security and Information Warfare
10. Comp Sci 454 — Software Engineering II
11. Comp Sci 467 — Computer Networks
12. Comp Sci 483 — Operating Systems
13. Comp Sci Option — (See Supplemental Information 1)
14. Math Option — (See Supplemental Information 2)

Supplemental Information:

1. The following are Comp Sci Options:
   Comp Sci 362 — Computer Simulation
   Comp Sci 431 — Cryptography

Comp Sci 468	Network Security
Comp Sci 471	Artificial Intelligence
Comp Sci 474	Computer Graphics
Comp Sci 495	Special Topics in Computer Science
Comp Sci 496	Computer Science Seminar
Comp Sci 499	Independent Study
Astro Engr 436	Small Spacecraft Engineering I
Astro Engr 437	Small Spacecraft Engineering II
ECE 281	Introductory Digital Systems
Law 440	Cyberlaw
MSS 470	Information and Cyberspace Operations
Ops Rsch 310	Systems Analysis
Sys Engr 460	Unmanned Aerial Vehicle (UAV) Systems

Note: Only one Astro course can count as a Comp Sci option.

2. The following are Math options:

Comp Sci 431	Cryptography
Math 243 (or Math 253)	Calculus III (or Advanced Placed Calculus III)
Math 245	Differential Equations
Math 359	Design and Analysis of Experiments
Philos 370	Introduction to Symbolic Logic

3 Required courses for the Computer Science-Cyber Warfare Option: Cadets that fill their Computer Science and Math options with the following courses will fulfill the requirements for the Cyber Warfare Option.

<u>Cyber Warfare Option</u>

Comp Sci 431	Cryptography
Comp Sci 468	Network Security

SUGGESTED COURSE SEQUENCE

Computer Science Major

	4°	hrs	per	3°	hrs	per	2°	hrs	per	1°	hrs	per
	For Lang 1	3	2	Comp Sci 210	3	2	Comp Sci 359	3	1	Comp Sci 426	3	1
	Beh Sci 110	3	1	**Poli Sci 211**	3	1	Comp Sci 483	3	1	Comp Sci 438	3	1
Fall	**History 100**	3	1	**Engr Mech 220**	3	1	Math Option	3	1	**Sys Opt Comp Sci 453**	3	2
	Math 141	3	1	**Econ 201**	3	1	**Philos 310**	3	1	**ECE 315**	3	1
	Comp Sci 110	3	1	**Physics 215**	3	2	**Beh Sci 310**	3	1	**MSS 415/416**	3	1
	Phy Ed	0.5	2	**English 211**	3	1	**Biology 315**	3	1	**Soc Sci 412**	3	1
		15.5	8	*Phy Ed*	1	2	*Phy Ed*	1	2	*Phy Ed*	0.5	2
					19	10		19	8		18.5	9
	For Lang 2	3	2	Comp Sci 220	3	1	Comp Sci 364	3	1	Comp Sci 454	3	2
	Chem 100	3	2	Comp Sci 351	3	1	Comp Sci 380	3	1	Comp Sci Option	3	1
Spring	**Engr 101**	3	1	Math 340	3	1	Comp Sci 467	3	1	***Acad Opt CS Option***	3	1
	English 111	3	1	**Law 220**	3	1	**Aero Engr 315**	3	1	**Astro Engr 410**	3	1
	Math 142	3	1	**Chem 200**	3	2	**History 300**	3	1	**English 411**	3	1
	Physics 110	3	2	**MSS 200**	3	1	**Math 356**	3	1	**Mgt 400**	3	1
	Phy Ed	0.5	2	*Phy Ed*	0.5	2	*Phy Ed*	0.5	2	*Phy Ed*	0.5	2
		18.5	11		18.5	9		18.5	8		18.5	9

Course Unit Summary
Core (32)
Major (14)
Academy Option (1)
Phy Ed (10)

Semester Hour Summary		
Core =	**96.0**	Sem Hours
Major =	42.0	"
Academy Option =	3.0	"
Phy Ed =	5.0	"
Total =	**146.0**	"

ECONOMICS

THE ECONOMICS MAJOR AT A GLANCE: Economics is the scientific study of how individuals and institutions use their limited resources to satisfy their unlimited wants. The discipline begins with a sequence of core economic courses and then branches outward allowing cadets to focus on the international arena, public policy and finance, or quantitative economics. The major is designed to help a student develop analytical skills which can be applied in a variety of circumstances. Cadets acquire the tools necessary to solve a wide range of problems such as allocating military personnel, analyzing a company's production efficiency, and evaluating the effect of government regulations. The Economics major develops problem solving techniques which have been proven effective in today's changing Air Force environment and is widely recognized as a solid background for careers in business, government, law, and teaching.

The goal of the Economics program is to graduate leaders of character who:

- Apply the Economic Way of Thinking to analyze and solve problems
  - Evaluate incentive structures of institutions / organizations / markets using the concepts of: opportunity cost, marginal analysis, supply & demand, specialization, gains from trade, and macroeconomics
  - Evaluate alternatives and the intended / unintended consequences of policy decisions to make optimal choices
  - Critically analyze economic, public issue, policy, national security, or other (multi-disciplinary) problems
- Understand the strengths and the limitations of economic analysis
  - Use positive / normative principles in relation to ethical implications
  - Choose appropriate analytical tools to solve economic problems
- Effectively communicate economic concepts and analyses
  - Explain (verbally and written) analytical and statistical concepts to non-economists
  - Construct persuasive arguments, based on economic insights, regarding rational choices

COURSE REQUIREMENTS: 146 Semester Hours

A. *96 Semester hours of Dean's academic core courses to include the following core substitutes:*

Required Core Substitute		Substitutes for
Math 356	Probability and Statistics for Engineers and Scientists	Math 300
Ops Rsch 310	Systems Analysis	Systems Option

B. *5 Semester hours of Director of Athletics core courses.*

C. *3 Semester hours of Academy Option.*

D. *42 Semester hours of major's courses:*

1. Econ 332	Microeconomic Theory I
2. Econ 333	Microeconomic Theory II
3. Econ 355	Principles of Macroeconomics
4. Econ 356	Intermediate Macroeconomics
5. Econ 240	Development of Economic Thought
6. Econ 365	Analysis of Economic Data
7. Econ 465	Introduction to Econometrics
8. Econ 450	International Economics
9. Econ 478	Defense Economics
10. Mgt 341	Financial Accounting
11.-14. Econ Electives	(See Supplemental Information)

Supplemental Information:

Two of the four Econ Electives must be 300- or 400-level economics courses (or Soc Sci 420), excluding Econ 301 and Econ 374. The two remaining Econ Electives can be any 300- or 400-level economics course or be from the list below:

For Lang $\geq$ 200-level	
Geo 310	Geospatial Information Analysis
Law 340	Business Law
Mgt 342	Managerial Accounting
Mgt 372	Introduction to Investments
Mgt 375	Market Analysis
Mgt 382	Investments
Mgt 391	Information Technology for Organizations
Mgt 392	Organizational Networks in Cyberspace
Mgt 337	Managerial Finance
Mgt 477	Production and Operations Management
Math 243 (or Math 253)	Calculus III (or Advanced Placed Calculus III)
Math 245	Differential Equations
Math 320	Foundations of Mathematics
Math 340	Discrete Mathematics
Math 342	Numerical Analysis
Math 359	Design and Analysis of Experiments
Math 360	Linear Algebra
or Math 344	or Matrices and Differential Equations
Math 366	Real Analysis I
Ops Rsch 321	Probabilistic Models
Ops Rsch 411	Topics in Mathematical Programming
Ops Rsch 419	Capstone in Operations Research I
Ops Rsch 420	Capstone in Operations Research II
Philos 330	Introduction to the Philosophy of Science
Pol Sci 394	Comparative Government and Politics
Pol Sci 444	International Political Economy
Pol Sci 445	International Organization & Global Issues

Pol Sci 460	Comparative Security Policy and Civil-Military Relations
Soc Sci 483	Principles of Negotiation & the Mediation Process
Sys Engr 301	Project Management
Sys Engr 310	Introduction to Systems Engineering

NOTE: Students seriously considering graduate school should take as many of the quantitative economic courses as possible. The quantitative options introduce the Economics major to some of the relatively difficult subjects before beginning graduate studies. Students seriously considering Financial Management and/or Cost Analysis are required to take Mgt 342.

SUGGESTED COURSE SEQUENCE

Economics Major

	4°	hrs	per	3°	hrs	per	2°	hrs	per	1°	hrs	per
	For Lang 1	3	2	**English 211**	3	1	Econ 332	3	1	Econ 450	3	1
	Chem 100	3	2	**Chem 200**	3	2	Econ 355	3	1	Econ 465	3	1
Fall	**History 100**	3	1	**Engr Mech 220**	3	1	Mgt 341	3	1	Econ Elective	3	1
	Math 141	3	1	**Econ 201**	3	1	**Philos 310**	3	1	***Academy Option***	3	1
	Comp Sci 110	3	1	**Physics 215**	3	2	**Math 356**	3	1	**MSS 415/416**	3	1
	Phy Ed	0.5	2	**Pol Sci 211**	3	1	**ECE 315**	3	1	**Soc Sci 412**	3	1
		15.5	9	*Phy Ed*	1	2	*Phy Ed*	1	2	*Phy Ed*	0.5	2
					19	10		19	8		18.5	8
	For Lang 2	3	2	Econ 240	3	1	Econ 333	3	1	Econ 478	3	2
	Beh Sci 110	3	1	**History 300**	3	1	Econ 356	3	1	Econ Elective	3	1
Spring	**Engr 101**	3	1	**Sys Opt Ops Rsch 310**	3	1	Econ 365	3	1	Econ Elective	3	1
	English 111	3	1	**Law 220**	3	1	Econ Elective	3	1	**English 411**	3	1
	Math 142	3	1	**MSS 200**	3	1	**Beh Sci 310**	3	1	**Astro Engr 410**	3	1
	Physics 110	3	2	**Biology 315**	3	2	**Aero Engr 315**	3	1	**Mgt 400**	3	1
	Phy Ed	0.5	2	*Phy Ed*	0.5	2	*Phy Ed*	0.5	2	*Phy Ed*	0.5	2
		18.5	10		18.5	9		18.5	8		18.5	9

Course Unit Summary
Core (32)
Major (14)
Academy Option (1)
Phy Ed (10)

Semester Hour Summary		
Core =	**96.0**	Sem Hours
Major =	42.0	"
Academy Option =	3.0	"
Phy Ed =	5.0	"
Total =	**146.0**	"

ELECTRICAL ENGINEERING

THE ELECTRICAL ENGINEERING MAJOR AT A GLANCE: The battlefield of the 21st century is increasingly an electronic one; electrical engineers (EEs) are leading the way in creating the technology that dominates. Without EEs, modern computers, control systems, or even high-fidelity sound systems would not be possible. Indeed, the modern military would not have its current capabilities without electronics and electrical engineers. Electronic systems are everywhere: sophisticated sensors detect and locate targets, "smart" computer guided munitions attack targets with amazing accuracy, aircraft fly "by wire," advanced radios provide reliable communications in high jamming environments, and aircrews depend on terrain following radar. All these systems are critical to the success of today's Air Force; the Air Force's future depends heavily on continued progress in these areas. The Electrical Engineering major covers the basic principles behind these systems and provides graduates with valuable insight into their operation. Officers who understand the technology and can use it to their advantage will have the "combat edge" over the opponent. If you want to help the Air Force find new and better ways to accomplish its mission, this major may be for you.

To ensure the success of our graduates, we prepare them to attain *Program Educational Objectives* two to five years after graduation. These are:

1) Recognition as successful Air Force officers through demonstration of their ability to:
   a. Rapidly acquire required knowledge.
   b. Lead others effectively.
   c. Effectively apply ethical and moral standards.
   d. Improve unit performance by application of organizational skills.
   e. Make sound decisions based on critical thinking.
   f. Communicate effectively.
2) Selection for career training on, or ahead of, schedule, and for a progression of assignments of increasing responsibility.
3) A demonstrated ability to solve Air Force technical problems.
4) Success in continuing education.

The *Program Educational Objectives* listed above describe what graduates are expected to attain within a few years of graduation. To support these goals, our program's curriculum is designed such that, by graduation, our graduates possess certain qualities or outcomes. The *Student Outcomes* are listed below. Each Electrical Engineering graduate shall demonstrate that they have attained the following outcomes:

1. an ability to apply knowledge of mathematics, science, and engineering
2. an ability to design and conduct experiments, as well as to analyze and interpret data
3. an ability to design a system, component, or process to meet desired needs within realistic constraints such as economic, environmental, social, political, ethical, health and
4. safety, manufacturability, and sustainability
5. an ability to function on multidisciplinary teams
6. an ability to identify, formulate, and solve engineering problems

7. an understanding of professional and ethical responsibility
8. an ability to communicate effectively
9. the broad education necessary to understand the impact of engineering solutions in a global, economic, environmental, and societal context
10. a recognition of the need for, and an ability to engage in life-long learning
11. a knowledge of contemporary issues
12. an ability to use the techniques, skills, and modern engineering tools necessary for engineering practice.

Cadets who successfully complete the Electrical Engineering major are awarded a Bachelor of Science in Electrical Engineering degree that is accredited by the Engineering Accreditation Commission of ABET, http://www.abet.org. The Electrical Engineering major is an excellent choice if you are interested in an advanced degree. As an electrical engineer, your knowledge and skill will be in high demand both in the Air Force and in society as a whole.

If you are considering Electrical Engineering as your major, you need to take ECE 210 and ECE 231 in the fall semester of your 3° year (in lieu of ECE 315).

COURSE REQUIREMENTS: 146 semester hours

A. *96 Semester hours of Dean's academic core courses to include the following core substitutes:*

Required Core Substitute		**Substitutes for**
Engr 311	Electrical Power	Systems Option
Math 356	Probability and Statistics for Engineers and Scientists	Math 300
ECE 231	Differential Equations with Circuit Applications I	ECE 315
Core Replacement		**Replaces**
ECE 463	Capstone Design Project I	Mgt 400

B. *5 Semester hours of Director of Athletics core courses.*

C. *3 Semester hours of Academy Option (El Engr Option #1 for accreditation requirements).*
(See Supplemental Information 1)

D. *42 Semester hours of major's courses:*

1. ECE 210 Principles of AF Electronic Systems
2. ECE 281 Introductory Digital Systems
3. ECE 321 Electronics I
4. ECE 322 Electronics II
5. ECE 332 Differential Equations with Circuit Applications II
6. ECE 333 Continuous-Time Signals and Linear Systems
7. ECE 343 Electromagnetics
8. ECE 382 Computer Architecture and Microcontrollers
9. ECE 434 Discrete-Time Signals and Systems
10. ECE 447 Communication Systems
11. ECE 464 Capstone Design Project II

12. Math 243 (or Math 253)	Calculus III (or Advanced Placed Calculus III)
13. Math 346	Engineering Math
14. El Engr Option #2	(See Supplemental Information 1)

Supplemental Information:

1. The elective options provide the opportunity for more in-depth study that will help prepare you for your career in the Air Force. They also help provide the foundation for your senior design project. ECE 463 and ECE 464 are the capstone courses of the Electrical Engineering major. The Department of Electrical and Computer Engineering offers four different areas of study: **Electronics, Communications, Computer Systems,** and **Controls**. There is also a **Universal Area** that allows you to take any two Electrical Engineering Options. Figure 10-2 shows suggested course flows for the various areas of study.

Area 1: Electronics - This area of study provides a general foundation in all areas of electrical engineering. The emphasis is on electronic design, components, and applications. It is well suited for those who want to retain the flexibility to work and/or do graduate studies in electrical engineering, physics, medicine, or other technical fields.

Area 2: Communications - Classes in this area of study are the basis for understanding modern radar and communication systems. Topics include: fiber optics, modulation techniques, radio components, and antennas. Study in this area leads to a better understanding of satellite communications and systems, telephones, stealth technology, and advanced radar systems.

Area 3: Computer Systems - In this area of study, the fundamentals and advanced concepts of computer design are explored. Topics include microcomputers, system design and interfacing, and computer architecture. Classes in this area of study lead to a better understanding of modern computer systems and digital hardware design.

Area 4: Controls - This area of study consists of two (2) courses taught by the Department of Astronautics. The analysis and design of automatic control systems is emphasized. Control systems are integral components of modern society, from a simple thermostat to space vehicles.

Area 5: Universal Area - You are free to choose two classes from the approved "Elective Options" list to fulfill the Electrical Engineering major's elective requirements. These electives provide the opportunity to "pick and choose" classes that interest you.

The two Electrical Engineering Options must be chosen from the following list of courses.

ECE 383	Microcomputer System Design I
ECE 387	Introduction to Robotic Systems
ECE 444	Applied Field Theory
ECE 448	Wireless Communications
ECE 472	Instrumentation System Fundamentals
ECE 473	Introduction to CMOS VLSI Circuit Design
ECE 484	Microcomputer System Design II

ECE 485	Computer Architecture
ECE 495	Special Topics (Dept Head approval required)
ECE 499	Independent Study (Dept Head approval required)
ECE 373	Digital VLSI Circuits
Engr 342	Linear Control System Analysis and Design
Engr 443	Advanced Control Theory and Design

2. Electrical Engineering majors are also highly encouraged to take Engr 402, Professional Engineering Development, and the Fundamentals of Engineering exam. Engr 402 provides an excellent review of the mathematics, engineering, and basic science curriculum. The flowchart on the following page shows the Electrical Engineering courses and areas of study.

SUGGESTED COURSE SEQUENCE

Electrical Engineering Major

	4°	hrs	per	3°	hrs	per	2°	hrs	per	1°	hrs	per
	For Lang 1	3	2	Math 243	3	1	Math 346	3	1	ECE 434	3	1
	Beh Sci 110	3	1	ECE 210	3	1	ECE 321	3	2	ECE 447	3	1
Fall	**Engr 101**	3	1	**English 211**	3	1	ECE 382	3	1	***Acad / El Engr Opt #1***	3	1
	Math 141	3	1	**ECE 231**	3	1	**Sys Opt Engr 311**	3	2	**Philos 310**	3	1
	Comp Sci 110	3	1	**MSS 200**	3	2	**Law 220**	3	1	**ECE 463**	3	2
	Phy Ed	0.5	2	**Physics 215**	3	1	**Biology 315**	3	2	**History 300**	3	1
		15.5	8	*Phy Ed*	1	2	*Phy Ed*	1	2	*Phy Ed*	0.5	2
					19	9		19	11		18.5	9
	For Lang 2	3	2	ECE 281	3	1	ECE 322	3	2	ECE 464	3	2
	Chem 100	3	2	ECE 332	3	1	ECE 333	3	1	El Engr Option #2	3	1
Spring	**History 100**	3	1	**Engr Mech 220**	3	1	ECE 343	3	1	**English 411**	3	1
	English 111	3	1	**Pol Sci 211**	3	1	**Aero Engr 315**	3	1	**MSS 415/416**	3	1
	Math 142	3	1	**Econ 201**	3	1	**Beh Sci 310**	3	1	**Soc Sci 412**	3	1
	Physics 110	3	2	**Chem 200**	3	2	**Math 356**	3	1	**Astro Engr 410**	3	1
	Phy Ed	0.5	2	*Phy Ed*	0.5	2	*Phy Ed*	0.5	2	*Phy Ed*	0.5	2
		18.5	11		18.5	9		18.5	9		18.5	9

Course Unit Summary
Core (32)
Major (14)
Academy Option (1)
Phy Ed (10)

Semester Hour Summary		
Core =	**96.0**	Sem Hours
Major =	42.0	"
Academy Option =	3.0	"
Phy Ed =	5.0	"
Total =	**146.0**	"

Figure 10-2

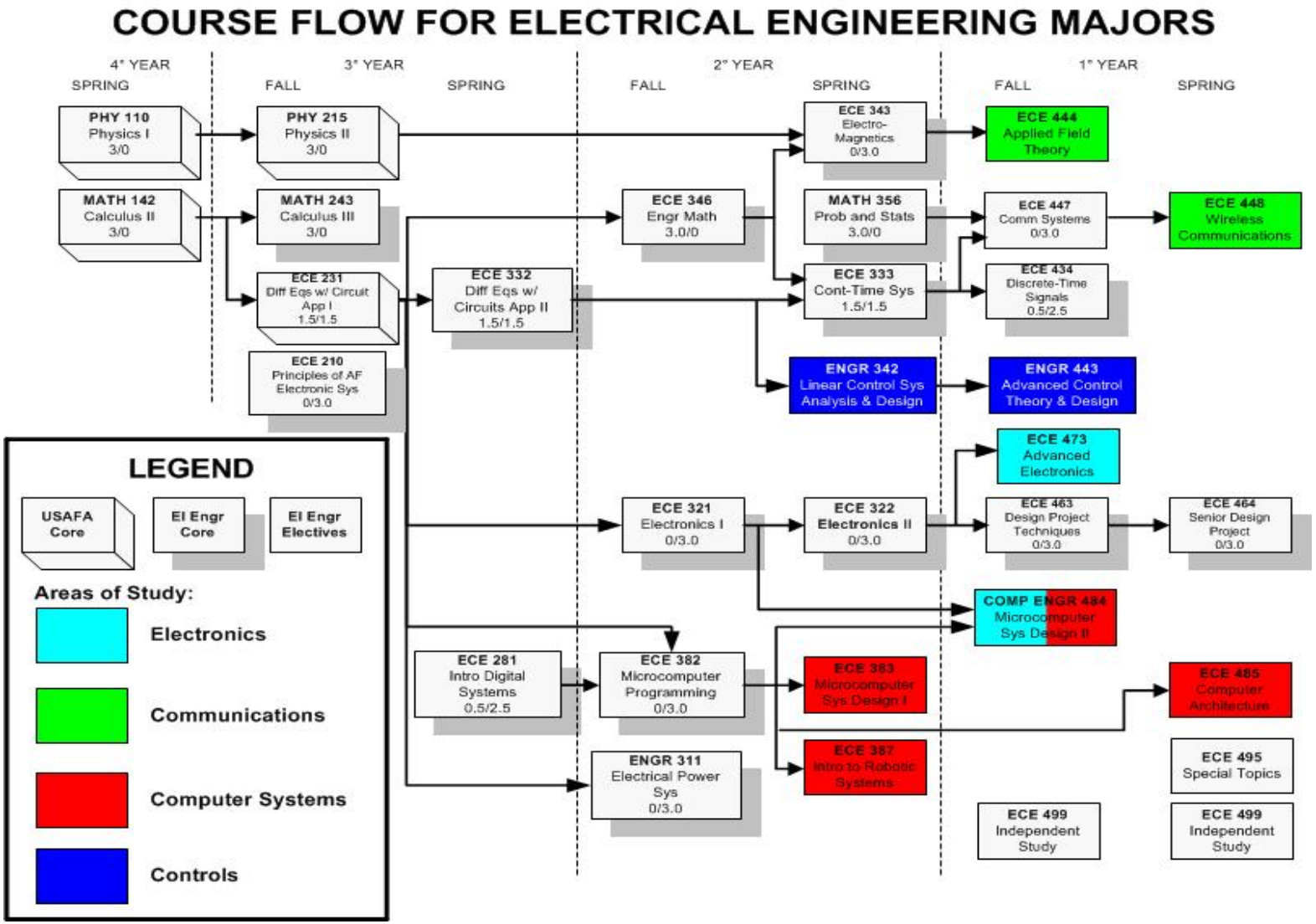
COURSE FLOW FOR ELECTRICAL ENGINEERING MAJORS
4° YEAR
3° YEAR
2° YEAR
1° YEAR
SPRING
FALL
SPRING
FALL
SPRING
FALL
SPRING
PHY 110 Physics I 3/0
PHY 215 Physics II 3/0
MATH 142 Calculus II 3/0
MATH 243 Calculus III 3/0
ECE 231 Diff Eqs w/ Circuit App I 1.5/1.5
ECE 210 Principles of AF Electronic Sys 0/3.0
ECE 332 Diff Eqs w/ Circuits App II 1.5/1.5
ECE 346 Engr Math 3.0/0
ECE 343 Electro-Magnetics 0/3.0
MATH 356 Prob and Stats 3.0/0
ECE 333 Cont-Time Sys 1.5/1.5
ENGR 342 Linear Control Sys Analysis & Design
ECE 444 Applied Field Theory
ECE 447 Comm Systems 0/3.0
ECE 448 Wireless Communications
ECE 434 Discrete-Time Signals 0.5/2.5
ENGR 443 Advanced Control Theory & Design
ECE 473 Advanced Electronics
ECE 321 Electronics I 0/3.0
ECE 322 Electronics II 0/3.0
ECE 463 Design Project Techniques 0/3.0
ECE 464 Senior Design Project 0/3.0
COMP ENGR 484 Microcomputer Sys Design II
ECE 281 Intro Digital Systems 0.5/2.5
ECE 382 Microcomputer Programming 0/3.0
ECE 383 Microcomputer Sys Design I
ECE 387 Intro to Robotic Systems
ECE 485 Computer Architecture
ENGR 311 Electrical Power Sys 0/3.0
ECE 495 Special Topics
ECE 499 Independent Study
ECE 499 Independent Study
LEGEND
USAFA Core
El Engr Core
El Engr Electives
Areas of Study:
Electronics
Communications
Computer Systems
Controls

ENGLISH

THE ENGLISH MAJOR AT A GLANCE: You study at the Air Force Academy to become a leader in our nation's military. Outstanding leadership starts with effective communication. That's exactly what you'll learn as an English major. Leaders throughout history have used their skills as readers, thinkers, and communicators to change the world. This is the essence of the English major. You will focus on literature, imagination, and communication as deliberate human endeavors. You'll explore the most perplexing questions of the human condition: What does it mean to be human? What is the source of our greatness and our depravity, our nobility and our pathos? For what ideals and against what forces must we fight? How will you persuade others, especially those you lead? How will you help them understand? The ultimate goal of the warrior-scholar is wisdom--a vision that transcends the ephemeral and the superfluous. The study of literature and communication offers the wisdom of generations to a new generation of leaders: you.

What is the curriculum like for an English major? The courses you study as an English major reflect a combination of the rigorous traditions of the discipline and your personal interests. The program is extremely flexible, allowing you to explore the literature and ideas that excite your curiosity. You will be able to pattern a curriculum suited to your desires--one that's sure to enrich your intellectual life. For those cadets who show outstanding potential, research grants for work at civilian institutions are available, as well as opportunities to present papers at professional conferences and to have research published.

Whom should you talk to about the English major? If you enjoy reading, thinking, and communicating, the English major is for you. Your studies as an English major will give you practical training in leadership. Great literature provides examples of human value systems and human relations--occasions for you to experience and appreciate the art of dealing with people before you receive your commission in the Air Force. For more information, contact the English Department at 333-3930.

COURSE REQUIREMENTS: 146 Semester hours

A. *96 Semester hours of Dean's academic core courses to include the following core substitutes:*

Required Core Substitute		**Substitutes for**
English 341	Literary Criticism	English 211
English 465 English 474 English 484	Television News, or Speech Communication: Theory and Practice, or Literature of War	English 411
Geo 310	Geospatial Information Analysis	Systems Option
Meteor 320	Introduction to meteorology and Aviation Weather	Systems Option

B. *5 Semester hours of Director of Athletics core courses.*

C. *3 Semester hours of Academy Option.*

D. 42 *Semester hours of major's courses:*

1. English 342	American Literature: Introduction
2. English 343	British Literature to 1780
3. English 344	British Literature 1780 - Present
4. English 353	Shakespeare

5-10. English Options (Choose six):

English 341 (reqd if not taken as core sub)
Any English course
Any Foreign Language course beyond core
Area Stu 495
Law 360
Mgt 440
History 320 or higher
Fine Art 375 or higher
Philos 330 or higher

11. English 390	Junior English Seminar
12. English 490	Senior English Seminar
13.-14. Foreign Language III and IV	

SUGGESTED COURSE SEQUENCE

English Major

	4°	hrs	per	3°	hrs	per	2°	hrs	per	1°	hrs	per
	For Lang 1	3	2	For Lang 3	3	1	English 343	3	1	English Option 2	3	1
	Beh Sci 110	3	1	**Engr Mech 220**	3	1	English Option 1	3	1	English Option 3	3	1
Fall	**History 100**	3	1	**Econ 201**	3	1	**Biology 315**	3	2	English Option 4	3	1
	Math 141	3	1	**Physics 215**	3	2	**Philos 310**	3	1	***Academy Option***	3	1
	Comp Sci 110	3	1	**English 341**	3	1	**Beh Sci 310**	3	1	**Astro Engr 410**	3	1
	Phy Ed	0.5	2	**Pol Sci 211**	3	1	**ECE 315**	3	1	**Soc Sci 412**	3	1
		15.5	8	*Phy Ed*	1	2	*Phy Ed*	1	2	*Phy Ed*	0.5	2
					19	9		19	9		18.5	8
	For Lang 2	3	2	For Lang 4	3	1	English 344	3	1	English 490	3	1
	Chem 100	3	2	English 342	3	1	English 390	3	1	English Option 5	3	1
Spring	**Engr 101**	3	1	**Law 220**	3	1	English 353	3	1	English Option 6	3	1
	English 111	3	1	**Chem 200**	3	2	**Math 300**	3	1	**English 465/474/484**	3	1
	Math 142	3	1	**MSS 200**	3	1	**Aero Engr 315**	3	1	**MSS 415/416**	3	1
	Physics 110	3	2	**Sys Opt Geo 310**	3	1	**History 300**	3	1	**Mgt 400**	3	1
	Phy Ed	0.5	2	*Phy Ed*	0.5	2	*Phy Ed*	0.5	2	*Phy Ed*	0.5	2
		18.5	11		18.5	9		18.5	8		18.5	8

Course Unit Summary
Core (32)
Major (14)
Academy Option (1)
Phy Ed (10)

Semester Hour Summary		
Core =	**96.0**	Sem Hours
Major =	42.0	"
Academy Option =	3.0	"
Phy Ed =	5.0	"
Total =	**146.0**	"

ENVIRONMENTAL ENGINEERING

THE ENVIRONMENTAL ENGINEERING MAJOR AT A GLANCE: Contaminated water, dirty air, bulging landfills, hazardous waste disposal and contamination clean up are environmental concerns which are growing in importance each day. The entire country is recognizing the importance of cleaning up past environmental contamination and preventing future pollution from occurring. The Environmental Engineering major offers cadets a broad environmental engineering education. Cadets in this major will get an understanding of the significant environmental problems facing this country and the Air Force. Course work will include how current environmental problems were created, the impacts of existing problems, how to correct existing contamination and how to prevent future contamination from occurring.

If you like science and mathematics and are interested in improving and maintaining our environment, then perhaps environmental engineering is the major for you. The curriculum at USAFA provides a well-balanced program stressing the fundamentals of the environmental engineering profession. The Environmental Engineering major is accredited by the Engineering Accreditation Commission of ABET, http://www.abet.org. Upon graduation you earn a Bachelor of Science in Environmental Engineering.

The Environmental Engineering major prepares cadets to be future Air Force leaders committed to improving and maintaining our environment. The degree has direct applications to Air Force career fields. A cadet with an Environmental Engineering degree is eligible for a civil engineer, general engineer, bioenvironmental engineer, research engineer, or flying Air Force Specialty Code.

To ensure the success of our graduates, we prepare them to attain *Program Educational Objectives* two to five years after graduation. These are:

1) Recognition as successful Air Force officers through demonstration of their ability to:
   a. Rapidly acquire required knowledge.
   b. Lead others effectively.
   c. Effectively apply ethical and moral standards.
   d. Improve unit performance by application of organizational skills.
   e. Make sound decisions based on critical thinking.
   f. Communicate effectively.
2) Selection for career training on, or ahead of, schedule, and for a progression of assignments of increasing responsibility.
3) A demonstrated ability to solve Air Force technical problems.
4) Success in continuing education.
5) Success in contingency operations.

The foundation that prepares graduates for attaining the *Program Educational Objectives* is provided by *Student Outcomes*. *Student Outcomes* describe what students must attain prior to graduation. These relate to the skills, knowledge, and behaviors that students acquire as they progress through the program. These *Student Outcomes* are:

1) an ability to apply knowledge of mathematics, science, and engineering
2) an ability to design and conduct experiments, as well as to analyze and interpret data
3) an ability to design a system, component, or process to meet desired needs within realistic constraints such as economic, environmental, social, political, ethical, health and safety, manufacturability, and sustainability
4) an ability to lead and function on multidisciplinary teams
5) an ability to identify, formulate, and solve engineering problems
6) an understanding of professional and ethical responsibility
7) an ability to communicate effectively both written and orally
8) the broad education necessary to understand the impact of engineering solutions in a military, global, economic, environmental, and societal context
9) a recognition of the need for, and an ability to engage in life-long learning
10) a knowledge of contemporary issues
11) an ability to use the techniques, skills, and modern engineering tools necessary for engineering practice

Incorporated within these outcomes, environmental engineering majors must demonstrate a knowledge of fundamental concepts of environmental engineering commonly applied to solve the types of complex, multidisciplinary problems they will face as Air Force engineers. In addition, graduates must also demonstrate design competence that includes integration of construction processes.

COURSE REQUIREMENTS: 146 Semester hours

A. *96 Semester hours of Dean's academic core courses to include the following core substitutes:*

Required Core Substitute		**Substitutes for**
ECE 231	Differential Equations with Circuit Applications I	ECE 315
Math 356	Probability and Statistics for Engineers and Scientists	Math 300
Mech Engr 312	Thermodynamics	Systems Option
Core Replacement		**Replaces**
Civ Engr 480	Project Management and Contract Administration	Mgt 400

B. *5 Semester hours of Director of Athletics core courses.*

C. *3 Semester hours of Academy Option (Basic Science Option for accreditation requirements).*
(See Supplemental Information 1)

D. *42 Semester hours of major's courses:*

1. Math 243 Calculus III or Math 253, Math 344, Math 359
2. Math 245 Differential Equations
3. Civ Engr 330 Elementary Structural Analysis
4. Civ Engr 351 Civil Engineering Practices - Field Engineering
5. Civ Engr 361 Fundamental Hydraulics
6. Civ Engr 362 Introduction to Environmental Engineering

7. Civ Engr 368 Hydrology and Contaminant Transport
8. Civ Engr 369 Introduction to Air Pollution
9. Civ Engr 390 Introduction to Soil Mechanics
10. Civ Engr 463 Wastewater Treatment Plant Design
11. Civ Engr 467 Water Treatment Principles and Design
12. Civ Engr 468 Solid and Hazardous Waste Facilities Design
13. Civ Engr 469 Design of Air Pollution Controls
14. Civ Engr 405 Civil Engineering Seminar
15. Engineering Option (See Supplemental Information 2)

Supplemental Information:

1. The Basic Science Option - any course taught by the departments listed below:
   Department of Biology
   Department of Chemistry
   Department of Mathematical Sciences
   Department of Physics
   Additionally, Geo 310, Geo 351, or Meteor 320 can satisfy this option.
   Note: Although the Department of Computer Science is part of the Basic Sciences Division, Computer Science courses cannot be taken to fulfill this option.

2. An Engineering Option is any course of at least three semester hours taught by the Engineering Division that has not been used to satisfy any other curriculum requirement.

SUGGESTED COURSE SEQUENCE

Environmental Engineering Major

	4°	hrs	per	3°	hrs	per	2°	hrs	per	1°	hrs	per
	For Lang 1	3	2	Math 243	3	1	Civ Engr 361	3	1	Civ Engr 369	3	1
	Beh Sci 110	3	1	**English 211**	3	1	Civ Engr 362	3	1	Civ Engr 467	3	1
Fall	**Engr 101**	3	1	**Engr Mech 220**	3	1	Civ Engr 390	3	2	Civ Engr 468	3	1
	Math 141	3	1	**Econ 201**	3	1	**Biology 315**	3	2	**Philos 310**	3	1
	Comp Sci 110	3	1	**Physics 215**	3	2	**ECE 231**	3	1	**Soc Sci 412**	3	1
	Phy Ed	0.5	2	**MSS 200**	3	1	**Sys Opt Mech Engr 312**	3	1	**English 411**	3	1
		15.5	8	*Phy Ed*	1	2	*Phy Ed*	1	2	*Phy Ed*	0.5	2
					19	9		19	10		18.5	8
	For Lang 2	3	2	Math 245	3	1	Civ Engr 368	3	1			
	Chem 100	3	2	Civ Engr 330	3	1	***Acad Opt Basic Sci Op***	3	1	Civ Engr 463	3	2
Spring	**History 100**	3	1	Engineering Option	3	1	**Aero Engr 315**	3	1	Civ Engr 469	3	1
	English 111	3	1	**Pol Sci 211**	3	1	**Beh Sci 310**	3	1	**MSS 415/416**	3	1
	Math 142	3	1	**Law 220**	3	1	**Math 356**	3	1	**Civ Engr 480**	3	2
	Physics 110	3	2	**Chem 200**	3	2	**History 300**	3	1	**Astro Engr 410**	3	1
	Phy Ed	0.5	2	*Phy Ed*	0.5	2	*Phy Ed*	0.5	2	*Phy Ed*	0.5	2
		18.5	11		18.5	9		18.5	8		15.5	9

Course Unit Summary
Core (32)
Major (14)
Academy Option (1)
Phy Ed (10)

Semester Hour Summary		
Core =	**96.0**	Sem Hours
Major =	39.0	"
Civ Engr 351 (summer)	3.0	"
Academy Option =	3.0	"
Phy Ed =	5.0	"
Total =	**146.0**	"

FOREIGN AREA STUDIES

THE FOREIGN AREA STUDIES MAJOR AT A GLANCE: Foreign Area Studies is the interdisciplinary study of one of six geo-cultural regions of the globe. Each program centers on foreign language, history, military and strategic studies, political science, economics, geospatial science, and cultural coursework in a region of specialization, as well as a comparative framework for understanding cross-cultural dynamics. The academic program leads to a Bachelor of Science Degree in Foreign Area Studies; coursework focuses on either African Area Studies, Latin American Area Studies, European Area Studies, Asian Area Studies, Middle Eastern Area Studies, or Slavic Area Studies. Foreign Area Studies majors will select a disciplinary emphasis (History, Geospatial Science, Military & Strategic Studies, or Political Science) which will determine which methods course, capstone course, and electives they take. Cadets double majoring in MSS and Foreign Area Studies will take MSS 379 and MSS 498 for their primary track research methods and integrating experience requirements. In addition, Foreign Area Studies majors may earn an academic minor in a foreign language.

COURSE REQUIREMENTS: 146 Semester Hours

A. 96 *Semester hours of Dean's academic core courses.*

B. *5 Semester hours of Director of Athletics core courses.*

C. *3 Semester hours of Academy Option.*

D. 42 *Semester hours of majors' courses:*

1. Foreign Language course	Minor	Cadets must complete at least four For Lang courses at the 200-level or higher in the same language
2. Foreign Language course	Minor	
3. Foreign Language course	Minor	
4. Foreign Language course	Minor	
5. Macroeconomic Principles	Econ 301	
6. Regional Economics	Econ 351/374/454/457/458/459	
7. Regional History	History 340/342/344/346/373/374	
8. Regional History	History 341/343/345/347/375/499	
9. Comparative Politics	Pol Sci 394	
10. Regional MSS	MSS 490/491/492/493/494/496	
11. Regional Politics	Pol Sci 469/471/473/475/477/479	
12. Regional Geography	Geo 470/471/475/480	
13. Research Methods	History 230, Pol Sci 300, or MSS 379	
14. Integrating Experience	History 498, Pol Sci 491, Geo 498, MSS 498 or another course approved by the FAS Working Group.	

NOTE: It is highly recommended that the Academy Option be filled by one of the following electives:

Pol Sci 499	Econ 240	Econ 332	Econ 374	Econ 450	Econ 495
Econ 499	English 343	English 344	Fine Art 495	Fine Art 499	ForArStu≥400
For Lang≥300	Geo 250	Geo 495	Geo 499	History 230	History 325
History 332	History 351	History 352	History 363	History 368	History 369
History 370	History 381	History 382	History 383	History 384	History 495
History 499	Hum 400	Hum 430	Hum 461	Hum 463	Hum 495
Law 361	Law 461	Law 499	MSS 360	MSS 365	MSS 450
MSS 362	MSS 363	MSS 367	MSS 470	MSS 477	MSS 480
MSS 485	MSS 490	MSS 491	MSS 493	MSS 494	Mgt 498
Philos 311	Philos 39x	Philos 401	Philos 402	Pol Sci 300	Pol Sci 301
Pol Sci 302	Pol Sci 390	Pol Sci 396	Pol Sci 421	Pol Sci 423	Pol Sci 444
Pol Sci 445	Pol Sci 460	Pol Sci 495	Pol Sci 496		

NOTES:

1. Foreign Area Studies majors may also take as an elective any course which appears on the "Course Requirements" list under letter "E" above not used to fill another requirement.

2. Cadets not using their Academy Option for Soaring IP Upgrade or Jumpmaster/Instructor Training are encouraged to use this option for an additional FAS elective course.

SUGGESTED COURSE SEQUENCE

Foreign Area Studies Major

	4°	hrs	per	3°	hrs	per	2°	hrs	per	1°	hrs	per
	For Lang 1	3	2	For Lang 3	3	1	For Lang 5	3	1	Regional Pol Sci	3	1
	Beh Sci 110	3	1	Regional Geo	3	1	Regional History 1	3	1	Regional Econ	3	1
Fall	**History 100**	3	1	**Engr Mech 220**	3	1	Econ 301	3	1	***Academy Option***	3	1
	Math 141	3	1	**Econ 201**	3	1	**Philos 310**	3	1	**Biology 315**	3	2
	Comp Sci 110	3	1	**Physics 215**	3	2	**Beh Sci 310**	3	1	**MSS 415/416**	3	1
	Phy Ed	0.5	2	**Pol Sci 211**	3	1	**ECE 315**	3	1	**S/T Energy Sys Option**	3	1
		15.5	8	*Phy Ed*	1	2	*Phy Ed*	1	2	*Phy Ed*	0.5	2
					19	9		19	8		18.5	9
	For Lang 2	3	2									
	Chem 100	3	2	For Lang 4	3	1	For Lang 6	3	1	Regional Econ	3	1
	Engr 101	3	1	**History 300**	3	1	Regional History 2	3	1	Integrating Experience	3	1
Spring	**English 111**	3	1	**Law 220**	3	1	Research Methods	3	1	**Soc Sci 412**	3	1
	Math 142	3	1	**Chem 200**	3	2	Pol Sci 394	3	1	**English 411**	3	1
	Physics 110	3	2	**MSS 200**	3	1	**Math 300**	3	1	**Astro Engr 410**	3	1
	Phy Ed	0.5	2	**English 211**	3	1	**Aero Engr 315**	3	1	**Mgt 400**	3	1
		18.5	11	*Phy Ed*	0.5	2	*Phy Ed*	0.5	2	*Phy Ed*	0.5	2
					18.5	9		18.5	8		18.5	8

Course Unit Summary
Core (32)
Major (14)
Academy Option (1)
Phy Ed (10)

Semester Hour Summary		
Core =	**96.0**	Sem Hours
Major =	42.0	"
Academy Option =	3.0	"
Phy Ed =	5.0	"
Total =	**146.0**	"

SUMMARY:

US national security strategy, since the end of the Cold War, has shifted from a policy of bi-polar containment to strategies of global engagement, partnership, expanded mutual security responsibilities, and a war on terrorism. The Air Force's strategies entail a variety of new roles and missions aimed at promoting regional stability, rendering humanitarian assistance, encouraging emerging democracies, gathering intelligence, and projecting and applying air power when necessary. Today's officers, from all Air Force career fields and specialties, will find themselves globally engaged, and such engagement requires global skills. The Foreign Area Studies major is designed to give future officers broad-based, foreign area-related skills for worldwide service commitments.

FOREIGN LANGUAGE MINOR

WHAT LANGUAGES ARE TAUGHT AT USAFA? You may study Arabic, Chinese, French, German, Japanese, Portuguese, Russian, or Spanish--eight of the most important languages in the world. Within each language there is a broad spectrum of courses. The 100-200 level courses, For Lang 321, and For Lang 322 are primarily skills development courses. The remaining courses are regarded as enhancement courses and are designed to develop a broader based appreciation of a particular culture, history, and literature. These courses also provide additional opportunities to develop and refine your language skills. The following courses comprise the curriculum of the Department of Foreign Languages (DFF):

SKILLS DEVELOPMENT COURSES

For Lang 131/132	Introduction to the Language, Culture, and Civilization
For Lang 141/142	Accelerated Basic: Foundational Language, Culture and Civilization
For Lang 221	Intermediate I: Refinement of Language Skills
For Lang 222	Intermediate II: Continued Development of Language Skills
For Lang 321	Advanced I: Capstone Course for Skills Development
For Lang 322	Advanced II: Follow-on Capstone Course for Skills Development

ENHANCEMENT COURSES

For Lang 365	Civilization and Culture (contemporary issues)
For Lang 370	Specialized courses in German, French, Spanish and Japanese
For Lang 376	Introduction to Literature
For Lang 491	Specialized Language Course (advanced readings)
For Lang 492	Semester Exchange Program Preparation
For Lang 495	Special Topics
For Lang 499	Independent Study (normally offered only to those students who have completed all courses)

NOTE: Enhancement courses may be taken out of sequence with DFF approval.

The chart below clarifies the foreign language course sequences:

Language	**Typical Course Sequence**						
		Fall	Spring	Fall	Spring	Fall	Spring
Arabic		131	132	221	222	321	322
Chinese		131	132	221	222	321	322
French		131	132	221	222	321	322
German		131	132	221	222	321	322
Japanese		131	132	221	222	321	322
Portuguese		131	132	221	222	321	322
Portuguese			150	221	222	321	322
Russian		131	132	221	222	321	322
Spanish		131	132	221	222	321	322

COURSE REQUIREMENTS FOR THE FOREIGN LANGUAGE MINOR: Cadets majoring in any academic division or discipline may earn a Foreign Language minor provided they complete four language courses beyond the 100-level, in residence, in the same language with a grade of 'C' or better, complete the requirements for their major, and take the Defense Language Proficiency Test (DLPT) no later than two months prior to graduation. ForArStu 400 also fills a course requirement for the minor.

HOW CAN I BENEFIT FROM FOREIGN LANGUAGE STUDY? Beyond helping to understand culture and broadening your worldview, studying a foreign language can influence your military career. Our ever-expanding global Air Force mission not only demands increasing foreign language capability to support national security strategies, but also provides challenging assignment opportunities for those looking for experience and diversification. Moreover, someday you may want to return to USAFA as a language instructor, a position that is both rewarding and career enhancing while providing the opportunity to influence other cadets toward becoming language-qualified Air Force officers. By speaking a foreign language, you become an "ambassador" helping to shape the opinions that others will have of our country and its armed forces...a crucial role in our increasingly interdependent world.

WHY STUDY A FOREIGN LANGUAGE? "Americans' scandalous incompetence in foreign languages explains our dangerously inadequate understanding of world affairs. Our schools graduate a large majority of students whose knowledge and vision stop at the American shoreline, whose approach to international affairs is provincial, whose heads have been filled with astonishing misinformation....The United States requires far more reliable capacities to communicate."

The quotation above is from the President's Commission on Foreign Languages and International Studies and underscores the importance of foreign language. Learning a foreign language at USAFA opens up an entirely new world. The study of languages helps further our understanding of other peoples, ourselves, and of our own culture. This understanding is of even greater importance for the military leader than for the public at large. Here are other important quotes:

"Just as we were ill-equipped to deal with the technological threats of the Cold War era, today we lack the linguistic and cultural skills and resources fundamental to competing in the new international environment."—Former Senator David Boren (D-OK), Chair, Senate Intelligence Committee

"In the post-Cold War world, the most important distinctions between peoples are no longer ideological, political, or economic. The distinctions are cultural."—Samuel P. Huntington

"We need policy-makers, diplomats, and intelligence analysts expert in cultures and languages that encompass all regions of the world."—Former Senator Sam Nunn

GEOSPATIAL SCIENCE

THE GEOSPATIAL SCIENCE MAJOR AT A GLANCE: The Geospatial Science program emphasizes learning about diverse cultures, physical landscapes, and geospatial tools that Expeditionary Air Force officers use. This major offers a diverse and challenging program focusing on contemporary world issues. A flexible curriculum has been carefully designed to permit either an in-depth or cross-disciplinary approach to the study of geospatial science, maximizing a cadet's ability to design his/her academic program beyond the core disciplinary requirements. Course offerings within the discipline represent a broad cross-section of the key geospatial science sub-fields including physical, human, and regional geography, as well as state-of-the-art geographic information processing methods such as digital image processing and geographic information systems. Furthermore, cadets who wish to complement their major in Geospatial Science with a foreign language minor will be able to achieve both without carrying an academic course overload.

Geospatial Science graduates distinguish themselves from other college graduates by the conceptual framework in which they view the world. They leverage knowledge of cultural and physical processes and digital modeling techniques to focus on the effects of space and place and interpret any landscape using an inherently geospatial approach.

Geospatial Science graduates can both formulate and answer the following questions:

1) What are the physical processes that shape this landscape?
2) What are the cultural processes that shape this landscape?
3) How can this landscape be digitally modeled for analysis?
4) What is the most effective manner to present analysis?

1) What are the physical processes that shape this landscape?

a) Identify the landforms present at a location, the physical processes that created them, determine how long they have been there, and predict their permanence.
b) Evaluate the impact of atmospheric processes and phenomena (past, current, and future) on the Earth system.
c) Deconstruct the Earth system into its component spheres to recommend solutions to environmental issues facing society.

2) What are the cultural processes that shape this landscape?

a) Identify and differentiate the main elements of cultural identity and expression, the processes giving rise to their distribution, and their impact on regional social patterns.
b) Compare and contrast the spatial variation of development (livelihood and economy) and give the physical and human geographic causes for the disparity between less developed and more developed regions.
c) Define the socio-political ordering of space and evaluate its impact on global and regional interaction.

d) Define and evaluate human impacts on the world's natural resources.

3) How can this landscape be digitally modeled for analysis?

a) Analyze spatial data using Geographic Information System to extract quantitative information.
b) Manipulate remote sensing imagery to analyze and identify surface phenomena.
c) Acquire and/or prepare the necessary data to solve a spatial problem.
d) Solve a spatial problem using data.

4) What is the most effective manner to present analysis?

a) Produce clear, concise cartographic products to effectively disseminate spatial information.
b) Deliver concise, focused, and substantive data, results, or information in written or verbal formats.

The Geospatial Science major provides excellent preparation for any assignment in the Expeditionary Air Force. The major also helps cadets develop international insight and cultural understanding of the battle space. Most Geospatial Science majors become pilots or intelligence officers. Many intelligence officers progress to become Foreign Area Officers or International Affairs Specialists.

Cadets who excel in this program are eligible to compete for scholarships to graduate school. These scholarships include not only the prestigious national scholarships, such as the Rhodes, Fulbright, and Marshall, but the USAFA Graduate Scholarship Program, in which graduates are sponsored by the Air Force Institute of Technology to earn their master's degree from a civilian institution.

COURSE REQUIREMENTS: 146 Semester hours

A. *96 Semester hours of Dean's academic core courses to include the following core substitute:*

Required Core Substitute		**Substitutes for**
Geo 310	Geospatial Information Analysis	Systems Option

B. *5 Semester hours of Director of Athletics core courses.*

C. *3 Semester hours of Academy Option.*

D. 42 *Semester hours of major's courses:*

1. Geo 250 Human Geography: A Global Cutlural Awareness
2. Geo 351 Introduction to Physical Geography
3. Geo 370 Military Geography
4. Geo 382 Remote Sensing and Imagery Analysis

5. Geo 498 Capstone in Geospatial Science
6. Advanced Geotechniques Option (Geo 410 or Geo 482)
7. Advanced Physical Geography Option (Geo 353 or Meteor 352)
8. Advanced Human Geography Option (Geo 470/ Geo 471/ Geo 475 / Geo 480)

9. – 12. Geospatial Science / Cognate Elective (select four from the following list)

Any Geospatial Science course beyond core or major's requirements
Any Foreign Language course beyond the four semester requirement
Any Foreign Area Studies course
Beh Sci 360
Biology 380
Civ Engr 215
Econ 301 / Econ 374 / Econ 454 / Econ 457
History 325 / History 341 / History 343 / History 345 / History 347 / History 352 / History 375 / History 480
Law 461
Meteor 320 / Meteor 352
Philos 401
Physics 371
Pol Sci 444 / Pol Sci 462 / Pol Sci 465 / Pol Sci 469 / Pol Sci 471 / Pol Sci 473 / Pol Sci 475 / Pol Sci 477 / Pol Sci 479

13.-14. Foreign Language III and IV

SUGGESTED COURSE SEQUENCE

Geospatial Science Major

	4°	hrs	per	3°	hrs	per	2°	hrs	per	1°	hrs	per
	For Lang 1	3	2	For Lang 3	3	1	Geo 351	3	1	Geo 490	3	1
	Beh Sci 110	3	1	**MSS 200**	3	1	Geo 370	3	1	Cognate Elective	3	1
Fall	**History 100**	3	1	**Engr Mech 220**	3	1	Geo 382	3	1	Cognate Elective	3	1
	Math 141	3	1	**Econ 201**	3	1	**Philos 310**	3	1	***Academy Option***	3	1
	Comp Sci 110	3	1	**Physics 215**	3	2	**Beh Sci 310**	3	1	**MSS 415/416**	3	1
	Phy Ed	0.5	2	**Pol Sci 211**	3	1	**ECE 315**	3	1	**Soc Sci 412**	3	1
		15.5	8	*Phy Ed*	1	2	*Phy Ed*	1	2	*Phy Ed*	0.5	2
					19	9		19	8		18.5	8
	For Lang 2	3	2	For Lang 4	3	1	Advanced Literacy Optic	3	1	Geo 498	3	2
	Chem 100	3	2	Geo 350	3	1	Soc Sci Div Option	3	1	Advanced Literacy Optio	3	1
Spring	**Engr 101**	3	1	**Geo 310**	3	1	**Biology 315**	3	2	Cognate Elective	3	1
	English 111	3	1	**Law 220**	3	1	**History 300**	3	1	**English 411**	3	1
	Math 142	3	1	**Chem 200**	3	2	**Math 300**	3	1	**Astro Engr 410**	3	1
	Physics 110	3	2	**English 211**	3	1	**Aero Engr 315**	3	1	**Mgt 400**	3	1
	Phy Ed	0.5	2	*Phy Ed*	0.5	2	*Phy Ed*	0.5	2	*Phy Ed*	0.5	2
		18.5	11		18.5	9		18.5	9		18.5	9

Course Unit Summary
Core (32)
Major (14)
Academy Option (1)
Phy Ed (10)

Semester Hour Summary		
Core =	**96.0**	Sem Hours
Major =	42.0	"
Academy Option =	3.0	"
Phy Ed =	5.0	"
Total =	**146.0**	"

THE GEOSPATIAL INTELLIGENCE (GEOINT) CERTIFICATE AT A GLANCE:

WHY PURSUE A CERTIFICATE IN GEOSPATIAL INTELLGIENCE?

Accurate intelligence is critical to the warfighter to achieve mission success. The field of Intelligence incorporates the collection, analysis, and exploitation of multiple forms of information. GEOINT addresses the collection, analysis, and exploitation of geospatial data. Examples of geospatial data, which contain a location on the Earth, include imagery, maps, census data, GPS coordinates, and digital models of the Earth.

GEOINT is critical to military operations and there is currently a scarcity of GEOINT-educated individuals. The GEOINT Certificate Program at USAFA is constructed in coordination with federal and industry experts via the USGIF and prepares cadets as GEOINT-skilled critical thinkers and leaders.

The GEOINT Certificate requires completion of the following courses:

1. Comp Sci 110 — Introduction to Computing
2. Law 220 — Law for Air Force Officers
3. Philos 310 — Ethics
4. Geo 310 — Geospatial Information Analysis

5. Geo 370 Military Geography
6. Geo 382 Remote Sensing and Imagery Analysis
7. Geo 410 Advanced Geospatial Analysis
8. Geo 482 Advanced Remote Sensing
9. Geo 498 Geospatial Science Capstone
10. Pol Sci 462 Politics and Intelligence

OTHER REQUIREMENTS:

The GEOINT Certificate requires completion of the above courses with a collective "B" average and no single course grade lower than a "C".

Application for admission into the GEOINT Certificate Program at USAFA is open to all cadets. The Department of Economics and Geosciences administers the program and oversees admissions decisions.

HISTORY

THE HISTORY MAJOR AT A GLANCE: An understanding of history is a critical component to the training of capable, educated officers. The knowledge gained and the perspective developed are important to the education of the professional Air Force officer. The study of history involves critical thinking, analysis, writing, and oral presentations--all essential skills for any Air Force officer. In addition, the study of foreign cultures, evolution of technology, and military heritage can directly relate to many duty situations. History also provides a natural forum for discussion of great leaders, past and present, and these insights are invaluable to any future Air Force officer.

The History major provides an exceptional degree of flexibility allowing you to plan a diverse study of history or establish a particular academic niche.

Those cadets who take at least four courses of Military History (in addition to the core) or at least four courses of American History (beyond History 351 and 352) may apply through the Department of History for these respective designations before the registration deadline in the fall semester of their first-class year.

COURSE REQUIREMENTS: 146 Semester Hours

A. *96 Semester hours of Dean's academic core courses to include the following core substitute:*

Required Core Substitute		**Substitutes for**
Geo 310	Geospatial Information Analysis	Systems Option

B. *5 Semester hours of Director of Athletics core courses.*

C. *3 Semester hours of Academy Option.*

D. *42 Semester hours of major's courses:*

American History, Military History, and History Major

1. History 230	Historiography and Methodology
2. History 351	The Foundations of Modern America
3. History 352	The History of Modern America
4. Aerospace Power Option	(See Supplemental Information 1)
5. Area History Option	(See Supplemental Information 2)
6.-10. History Options	(See Supplemental Information 3)
11. History Capstone	(See Supplemental Information 4)
12. Open Academic Option	(See Supplemental Information 5)
13.-14. Foreign Language III and IV	

Supplemental Information:

1. AeroSpace History Option: Any course from the following list fulfills this requirement:

History 371	Airpower History
History 376	A History of Space Power

2. Area History Option: Any course from the following list fulfills this requirement for History Major.

History 340	History of Colonial Latin America
History 341	History of Modern Latin America
History 342	History of Traditional East Asia
History 343	History of Modern East Asia
History 344	Foundations of European History
History 345	Modern European History
History 346	History of Russia
History 347	History of Modern Russia
History 373	History of Sub-Saharan Africa
History 374	Foundations of Middle Eastern History
History 375	Modern Middle Eastern History

3. History Options: Select any five history courses from the Curriculum Handbook. To achieve a Military History designation on your transcript, four of the five must be Military History courses. To achieve an American History designation on your transcript, four of the five must be American History courses.

4. History Capstone:

For an American History Major:	History 480	Studies in American Civilization
For a Military History Major:	History 457	History of Military Thought
For a History Major:	History 498	Global Dimensions of History

5. Open Academic Option: Any course offered by the Basic Sciences, Engineering, Social Sciences, or Humanities divisions.

International History Major (Single Region)

1. History 230	Historiography and Methodology
2. History 351	The Foundations of Modern America
3. History 352	The History of Modern America
4. AeroSpace History Option	(See Supplemental Information 1)
5. Early Area History Option	(See Supplemental Information 2)
6. Modern Area History Option	(See Supplemental Information 3)
7. World Military History Option	(See Supplemental Information 4)
8. Other Area History Option	(See Supplemental Information 5)
9. Any History Course 300- or 400-level	
10. History 332	History of US Foreign Relations
11. History Capstone – History 498	Global Dimensions of History
12. Open Academic Option	
13-14. Foreign Language III and IV	

Supplemental Information:

1. Aerospace Power Option: Any course from the following list fulfills this requirement:

History 371	Airpower History
History 376	A History of Space Power

2. Early Area History Option: Any course from the following list fulfills this requirement for History Major.

History 340	History of Colonial Latin America
History 342	History of Traditional East Asia
History 344	Foundations of European History
History 346	History of Russia
History 373	History of Sub-Saharan Africa
History 374	Foundations of Middle Eastern History

3. Modern Area History Option: Select the appropriate modern history course for the region of study.

History 341	History of Modern Latin America
History 343	History of Modern East Asia
History 345	Modern European History
History 347	History of Modern Russia
History 375	Modern Middle Eastern History

Note: Africanists will take Foundations of Middle Eastern History (History 374) or Modern Middle Eastern History (History 375) course as their second area history option.

4. World Military History Option:

History 381	Topics in Asian Military History
History 382	Topics in African Military History
History 383	Topics in Middle Eastern Military History
History 384	Topics in Latin American Military History

Note: Europeanists and Russianists will choose a relevant military history course such as History 370 or History 368 as their World Military History Option.

5. Cadets will choose a history course in a region outside their expertise from lists 5 and 6.

International History Major (Multiple Regions)

1. History 230	Historiography and Methodology
2. History 351	The Foundations of Modern America
3. History 352	The History of Modern America
4. Aerospace Power Option	(See Supplemental Information 1)
5-9. Area History Options	(See Supplemental Information 2)
10. History 332	History of US Foreign Relations
11. History Capstone – History 498	Global Dimensions of History
12. Open Academic Option	
13-14. Foreign Language III and IV	

Supplemental Information:

1. Aerospace Power Option: Any course from the following list fulfills this requirement:

History 371	Airpower History
History 376	A History of Space Power

2. Area History Options: Cadets will choose any five area history courses from the list below covering three or more different regions: Africa, Europe, Russia, Latin America, Middle East, Asia.

History 340	History of Colonial Latin America
History 341	History of Modern Latin America
History 342	History of Traditional East Asia
History 343	History of Modern East Asia
History 344	Foundations of European History
History 345	Modern European History
History 346	History of Russia
History 347	History of Modern Russia
History 373	History of Sub-Saharan Africa
History 374	Foundations of Middle Eastern History
History 375	Modern Middle Eastern History

SUGGESTED COURSE SEQUENCE

American History, Military History, History

	4°	hrs	per	3°	hrs	per	2°	hrs	per	1°	hrs	per
	For Lang 1	3	2	For Lang 3	3	1	History 351	3	1	History Option 2	3	1
	Beh Sci 110	3	1	**MSS 200**	3	1	Aerospace History Opt	3	1	History Option 3	3	1
Fall	**History 100**	3	1	**Engr Mech 220**	3	1	**Biology 315**	3	2	History Capstone	3	1
	Math 141	3	1	**Econ 201**	3	1	**Philos 310**	3	1	***Academy Option***	3	1
	Comp Sci 110	3	1	**Physics 215**	3	2	**Beh Sci 310**	3	1	**MSS 415/416**	3	1
	Phy Ed	0.5	2	**Pol Sci 211**	3	1	**ECE 315**	3	1	**Soc Sci 412**	3	1
		15.5	8	*Phy Ed*	1	2	*Phy Ed*	1	2	*Phy Ed*	0.5	2
					19	9		19	9		18.5	8
	For Lang 2	3	2	For Lang 4	3	1	History 352	3	1	History Option 4	3	1
	Chem 100	3	2	History 230	3	1	History Option 1	3	1	History Option 5	3	1
Spring	**Engr 101**	3	1	**History 300**	3	1	Area History Option	3	1	Open Academic Option	3	1
	English 111	3	1	**Law 220**	3	1	**Geo 310**	3	1	**English 411**	3	1
	Math 142	3	1	**Chem 200**	3	2	**Math 300**	3	1	**Astro Engr 410**	3	1
	Physics 110	3	2	**English 211**	3	1	**Aero Engr 315**	3	1	**Mgt 400**	3	1
	Phy Ed	0.5	2	*Phy Ed*	0.5	2	*Phy Ed*	0.5	2	*Phy Ed*	0.5	2
		18.5	11		18.5	9		18.5	8		18.5	8

Course Unit Summary
Core (32)
Major (14)
Academy Option (1)
Phy Ed (10)

Semester Hour Summary		
Core =	**96.0**	Sem Hours
Major =	42.0	"
Academy Option =	3.0	"
Phy Ed =	5.0	"
Total =	**146.0**	"

International History (Single Region)

	4°	hrs	per	3°	hrs	per	2°	hrs	per	1°	hrs	per
	For Lang 1	3	2	For Lang 3	3	1	History 351	3	1	World Mil History Opt	3	1
	Beh Sci 110	3	1	**MSS 200**	3	1	Aerospace History Opt	3	1	Modern Area History Op	3	1
Fall	**History 100**	3	1	**Engr Mech 220**	3	1	**Biology 315**	3	2	History Capstone	3	1
	Math 141	3	1	**Econ 201**	3	1	**Philos 310**	3	1	***Academy Option***	3	1
	Comp Sci 110	3	1	**Physics 215**	3	2	**Beh Sci 310**	3	1	**MSS 415/416**	3	1
	Phy Ed	0.5	2	**Pol Sci 211**	3	1	**ECE 315**	3	1	**Soc Sci 412**	3	1
		15.5	8	*Phy Ed*	1	2	*Phy Ed*	1	2	*Phy Ed*	0.5	2
					19	9		19	9		18.5	8
	For Lang 2	3	2	For Lang 4	3	1	History 352	3	1	Any History Option	3	1
	Chem 100	3	2	History 230	3	1	Early History Option	3	1	Other Area History Opt	3	1
Spring	**Engr 101**	3	1	**History 300**	3	1	History 332	3	1	Open Academic Option	3	1
	English 111	3	1	**Law 220**	3	1	**Geo 310**	3	1	**English 411**	3	1
	Math 142	3	1	**Chem 200**	3	2	**Math 300**	3	1	**Astro Engr 410**	3	1
	Physics 110	3	2	**English 211**	3	1	**Aero Engr 315**	3	1	**Mgt 400**	3	1
	Phy Ed	0.5	2	*Phy Ed*	0.5	2	*Phy Ed*	0.5	2	*Phy Ed*	0.5	2
		18.5	11		18.5	9		18.5	8		18.5	8

Course Unit Summary
Core (32)
Major (14)
Academy Option (1)
Phy Ed (10)

Semester Hour Summary		
Core =	**96.0**	Sem Hours
Major =	42.0	"
Academy Option =	3.0	"
Phy Ed =	5.0	"
Total =	**146.0**	"

International History (Multiple Regions)

	4°	hrs	per	3°	hrs	per	2°	hrs	per	1°	hrs	per
	For Lang 1	3	2	For Lang 3	3	1	History 351	3	1	Area History Option 2	3	1
	Beh Sci 110	3	1	**MSS 200**	3	1	Aerospace History Opt	3	1	Area History Option 3	3	1
Fall	**History 100**	3	1	**Engr Mech 220**	3	1	**Biology 315**	3	2	History Capstone	3	1
	Math 141	3	1	**Econ 201**	3	1	**Philos 310**	3	1	***Academy Option***	3	1
	Comp Sci 110	3	1	**Physics 215**	3	2	**Beh Sci 310**	3	1	**MSS 415/416**	3	1
	Phy Ed	0.5	2	**Pol Sci 211**	3	1	**ECE 315**	3	1	**Soc Sci 412**	3	1
		15.5	8	*Phy Ed*	1	2	*Phy Ed*	1	2	*Phy Ed*	0.5	2
					19	9		19	9		18.5	8
	For Lang 2	3	2	For Lang 4	3	1	History 352	3	1	Area History Option 4	3	1
	Chem 100	3	2	History 230	3	1	Area History Option 1	3	1	Area History Option 5	3	1
Spring	**Engr 101**	3	1	**History 300**	3	1	History 332	3	1	Open Academic Option	3	1
	English 111	3	1	**Law 220**	3	1	**Geo 310**	3	1	**English 411**	3	1
	Math 142	3	1	**Chem 200**	3	2	**Math 300**	3	1	**Astro Engr 410**	3	1
	Physics 110	3	2	**English 211**	3	1	**Aero Engr 315**	3	1	**Mgt 400**	3	1
	Phy Ed	0.5	2	*Phy Ed*	0.5	2	*Phy Ed*	0.5	2	*Phy Ed*	0.5	2
		18.5	11		18.5	9		18.5	8		18.5	8

Course Unit Summary
Core (32)
Major (14)
Academy Option (1)
Phy Ed (10)

Semester Hour Summary		
Core =	**96.0**	Sem Hours
Major =	42.0	"
Academy Option =	3.0	"
Phy Ed =	5.0	"
Total =	**146.0**	"

LEGAL STUDIES

THE LEGAL STUDIES MAJOR AT A GLANCE: The Legal Studies major provides a broad liberal arts background upon which a cadet at the United States Air Force Academy may build expertise in the study of law and its role and function in both American society and the international community. Increasingly complex legal considerations permeate every aspect of modern life in both the civilian and military environments. Cadets who choose the Legal Studies major will be able to develop the analytical skills that will permit them to identify, understand, and resolve the complex legal issues which they will likely encounter after graduation. The Legal Studies major is not a "pre-law" major, but is designed to provide cadets an enhanced knowledge of the law as part of a broadly focused education.

The Department of Law and the Legal Studies major fall within the Social Sciences Division. Cadets who elect to major in Legal Studies must complete fourteen courses in addition to the required academic core; five of these fourteen must be upper level courses offered by the Department of Law. In addition to the Law courses, a Legal Studies major has discretion in taking courses offered by the Departments of Behavioral Sciences and Leadership, Economics and Geosciences, English and Fine Arts, Foreign Languages, History, Management, Military & Strategic Studies, Philosophy, and Political Sciences. This program of study is designed to expose the student to a broad range of issues within the discipline of law. It provides a broad liberal arts background, upon which an Air Force officer may build specialized expertise in an area of increasing relevance and importance.

COURSE REQUIREMENTS: 146 Semester hours

A. *96 Semester hours of Dean's academic core courses to include the following core substitute:*

Required Core Substitute		**Substitutes for**
Ops Rsch 310	Systems Analysis	Systems Option

B. *5 Semester hours of Director of Athletics core courses.*

C. *3 Semester hours of Academy Option.*

D. *42 Semester hours of major's courses:*

1.	Law 221	Legal Research, Writing and Advocacy
2.	Law 331	Criminal Law and Procedure
3.	Law 351	U.S. Constitutional Law
4.	Law 421	Law for Commanders
5.	Law 485	Legal Studies Capstone
6.-10.	Law Options	Any five of the following courses:
	Law 340	Business Law
	Law 360	Law and Literature
	Law 361	Modern Application of the Law of Armed Conflict

Law 440	Cyberlaw
Law 456	National Security Law
Law 461	International Law
Law 466	Advanced Topics in the Law of Armed Conflict
Law 495	Special Topics (when offered)
Law 499	Independent Study
Philos 360	Applied Reasoning
Philos 395	Philosophy of Law
Pol Sci 423	War Crimes, Genocide, and Human Rights
Pol Sci 465	U.S. National Space Policy
Soc Sci 420	Law and Economics
Soc Sci 483	Principles of Negotiation and the Mediation Process

11.-12. Any two Social Sciences/Humanities 300/400-level courses

13.-14. Foreign Language III and IV

SUGGESTED COURSE SEQUENCE

Legal Studies Major

	4°	hrs	per	3°	hrs	per	2°	hrs	per	1°	hrs	per
	For Lang 1	3	2	For Lang 3	3	1	Law 331	3	1	Law 421	3	1
	Beh Sci 110	3	1	**MSS 200**	3	1	Law Option 2	3	1	Law Option 4	3	1
Fall	**History 100**	3	1	**Engr Mech 220**	3	1	**Biology 315**	3	2	Soc Sci / Hum Option 1	3	1
	Math 141	3	1	**Econ 201**	3	1	**Philos 310**	3	1	***Academy Option***	3	1
	Comp Sci 110	3	1	**Physics 215**	3	2	**Beh Sci 310**	3	1	**MSS 415/416**	3	1
	Phy Ed	0.5	2	**Pol Sci 211**	3	1	**ECE 315**	3	1	**Soc Sci 412**	3	1
		15.5	8	*Phy Ed*	1	2	*Phy Ed*	1	2	*Phy Ed*	0.5	2
					19	9		19	9		18.5	8
	For Lang 2	3	2	For Lang 4	3	1	Law 351	3	1	Law 485	3	2
	Chem 100	3	2	Law 221	3	1	Law Option 3	3	1	Law Option 5	3	1
Spring	**Engr 101**	3	1	Law Option 1	3	1	**History 300**	3	1	Soc Sci / Hum Option 2	3	1
	English 111	3	1	**Law 220**	3	1	**Ops Rsch 310**	3	1	**English 411**	3	1
	Math 142	3	1	**Chem 200**	3	2	**Math 300**	3	1	**Astro Engr 410**	3	1
	Physics 110	3	2	**English 211**	3	1	**Aero Engr 315**	3	1	**Mgt 400**	3	1
	Phy Ed	0.5	2	*Phy Ed*	0.5	2	*Phy Ed*	0.5	2	*Phy Ed*	0.5	2
		18.5	11		18.5	9		18.5	8		18.5	9

Course Unit Summary
Core (32)
Major (14)
Academy Option (1)
Phy Ed (10)

Semester Hour Summary		
Core =	**96.0**	Sem Hours
Major =	42.0	"
Academy Option =	3.0	"
Phy Ed =	5.0	"
Total =	**146.0**	"

MANAGEMENT

THE MANAGEMENT MAJOR AT A GLANCE: The Management major prepares cadets for management and leadership roles in today's technologically complex, global Air Force. The curriculum is designed to develop cadets who can understand, analyze, and improve organizations through the efficient and effective use of systems. The courses in the major help students develop adaptive capacity and the organizational knowledge and skills vital for Air Force officers as well as future national leaders. The Management Department is accredited by the AACSB (Association to Advance Collegiate Schools of Business), and the management major ranks among the most prestigious undergraduate management and business degrees in the nation. Our curriculum, together with the Academy's core courses, provide an excellent educational foundation for cadets interested in pursuing Air Force careers (AFSCs) such as *11XX (Pilot), 12XX (Navigator), 13BX (Air Battle Manager), 13S1 (Space and Missile Operations), 14N1 (Intelligence), 21A1 (Aircraft Maintenance), 21R1 (Logistics Readiness), 31P1 (Security Police), 33S1 (Communications and Information), 41AX (Health Services Administrator), 63A1 (Acquisition Manager), 64P1 (Contracting), 65F1 (Financial Management), 65W1 (Cost Analysis), and 71SX (Special Investigator).* Additionally, the Management major prepares cadets interested in pursuing graduate degrees in Management, Management Science, and/or Business Administration.

The Management major is designed to produce critical thinkers who will lead organizations to quickly adapt and succeed in rapidly changing, highly technical, global environments. Management majors study traditional managerial and business topics such as organizational perspectives and theories, global organizations, complex human systems, financial and managerial accounting, managerial finance, human resource management, marketing, production and operations management, information systems, and strategic management. Related subjects, such as personal finance and investing, are also popular among our majors.

COURSE REQUIREMENTS: 146 Semester Hours

A. *96 Semester hours of Dean's academic core courses to include the following core substitute:*

Required Core Substitute		**Substitutes for**
Ops Rsch 310	Systems Analysis	Systems Option
Mgt 303	Management Perspectives	Mgt 400

B. *5 Semester hours of Director of Athletics core courses.*

C. *3 Semester hours of Academy Option.*

D. *42 Semester hours of additional major's courses.*

1. Mgt 341 Financial Accounting
2. Mgt 342 Managerial Accounting
3. Mgt 345 Human Managerial Systems I
4. Mgt 337 Managerial Finance

5. Mgt 420 Management Capstone Practicum
6. Mgt 472 Strategic Management Capstone
7. Sys Engr 301 Project Management

8-12. Select five of the following Mgt Options

Law 340	Business Law
Mgt 361	Human Managerial Systems II
Mgt 372	Introduction to Investments
Mgt 375	Market Analysis
Mgt 382	Investments
Mgt 391	Information Technology for Organizations
Mgt 392	Organizational Networks in Cyberspace
Mgt 419	Technological Innovation Management
Mgt 423	Managerial Economics
Mgt 440	Management Lessons in Literature
Mgt 448	Power and Influence in Organizations
Mgt 477	Production and Operations Management
Mgt 478	Supply Chain Management
Mgt 495	Special Topics
Mgt 498	International Management
Soc Sci 483	Principles of Negotiation

Any Foreign language 322-level course or above or For Ar Stu 400/401

13.-14. Foreign Language III and IV

15. Mgt 405 Management Seminar
16. Mgt 406 Management Seminar

SUGGESTED COURSE SEQUENCE

Management Major

	4°	hrs	per	3°	hrs	per	2°	hrs	per	1°	hrs	per
	For Lang 1	3	2	For Lang 3	3	1	Mgt 341	3	1	Mgt 472	3	1
	Beh Sci 110	3	1	**English 211**	3	1	Mgt 345	3	2	Mgt Option 1	3	1
Fall	**History 100**	3	1	**Engr Mech 220**	3	1	**Mgt 303**	3	2	Mgt Option 2	3	1
	Math 141	3	1	**Econ 201**	3	1	**Biology 315**	3	2	Mgt Option 3	3	1
	Comp Sci 110	3	1	**Physics 215**	3	2	**Philos 310**	3	1	Mgt 405	0	1
	Phy Ed	0.5	2	**Pol Sci 211**	3	1	**Beh Sci 310**	3	1	**MSS 415/416**	3	1
		15.5	8	*Phy Ed*	1	2	*Phy Ed*	1	2	**Soc Sci 412**	3	1
					19	9		19	11	*Phy Ed*	0.5	2
											18.5	9
	For Lang 2	3	2	For Lang 4	3	1	Mgt 337	3	1	Mgt 420	3	2
	Chem 100	3	2	**Ops Rsch 310**	3	1	Sys Engr 301	3	1	Mgt Option 4	3	1
Spring	**Engr 101**	3	1	**MSS 200**	3	1	Mgt 342	3	1	Mgt Option 5	3	2
	English 111	3	1	**Law 220**	3	1	**History 300**	3	1	***Academy Option***	3	1
	Math 142	3	1	**Chem 200**	3	2	**Math 300**	3	1	Mgt 406	0	1
	Physics 110	3	2	**ECE 315**	3	1	**Aero Engr 315**	3	1	**English 411**	3	1
	Phy Ed	0.5	2	*Phy Ed*	0.5	2	*Phy Ed*	0.5	2	**Astro Engr 410**	3	1
		18.5	11		18.5	9		18.5	8	*Phy Ed*	0.5	2
											18.5	11

Course Unit Summary
Core (32)
Major (14)
Academy Option (1)
Phy Ed (10)

Semester Hour Summary		
Core =	**96.0**	Sem Hours
Major =	42.0	"
Academy Option =	3.0	"
Phy Ed =	5.0	"
Total =	**146.0**	"

NOTE: The various option courses are chosen in consultation with the academic advisor. Advisors have access to recommended option sequences based on cadet interests, such as academic areas, AFSCs, or the DFM mission areas of people, resources, or technology.

MATHEMATICS

THE MATHEMATICS MAJOR AT A GLANCE: We've designed the Mathematics major to teach you the problem solving, analytical, and communication skills you'll need to deal with the complex operational, management, engineering, and mathematical problems you'll encounter as an officer in the Air Force of today and tomorrow. You'll take courses in applied mathematics, analysis, statistics, and operations research to provide a breadth of education beyond the classical areas of mathematical study. In each of these areas you'll increase your ability to: a) logically analyze a problem, b) determine the tools required to formulate a solution, c) develop and execute the solution, and d) effectively communicate the process and conclusions of that solution. The key to the Mathematics major is flexibility. It allows you the flexibility to choose the areas you'll study. You'll have the opportunity to choose one of three specialty options allowing you to study the area of mathematics in which you have the most interest. Should you declare a second major, you can substitute courses from your second discipline for your open options. The program also provides enormous flexibility in the opportunities that will be available to you as an Air Force officer. An officer with a background in mathematics has many different AFSCs from which to choose, such as space systems analyst, scientific analyst, and intelligence applications officer. This list is certainly not exhaustive since it doesn't include any of the AF specialties with no specific degree requirements. Mathematics majors do very well in a diverse set of graduate school disciplines, such as operations research, physics, most engineering disciplines, business administration, economics, computer science, law, medicine, meteorology, and, of course, mathematics.

Most Mathematics majors declare during their third- or fourth-class years. However, occasionally a cadet who has already taken Math 243 (or Math 253) and Math 245 declares as late as the fall of his/her second-class year. It is recommended that cadets have a minimum 2.70 cum GPA before declaring the Mathematics major. If you have questions regarding this major (coursework, difficulty level, and graduate school/career opportunities), please stop by the Department of Mathematical Sciences and talk to the Advisor-in-Charge.

COURSE REQUIREMENTS: 146 Semester hours

A. *96 Semester hours of Dean's academic core courses to include the following core substitute*:

Required Core Substitute		**Substitutes for**
Math 378	Advanced Statistics	Math 300

B. *5 Semester hours of Director of Athletics core courses.*

C. *3 Semester hours of Academy Option.*

D. *36 Semester hours of required major's courses:*

1. Math 243 (or Math 253) Calculus III (or Advanced Placed Calculus III)
2. Math 245 Differential Equations

3. Math 320	Foundations of Mathematics
4. Math 342	Numerical Analysis
5. Math 346	Engineering Math
6 Math 377	Advanced Probability
7. Math 360	Linear Algebra
8. Math 366	Real Analysis I
9. Comp Sci 211	Programming for Scientists and Engineers
10. Math 420	Mathematics Capstone I
11. Math 421	Mathematics Capstone II
12. Math Open Option	3.0 sem hrs of a 300/400-level math course (excluding Math 310) or a substitute approved by the Math AIC

F. *6 Semester hours of courses in one of the options outlined below.*

Applied Mathematics Option

a. Must complete one of:

Math 374	Combinatorics and Graph Theory
Math 451	Complex Variables

b. Must complete one of:

Math 468	Dynamical Systems
Math 469	Partial Differential Equations
Math 470	Mathematical Physics

Pure Mathematics Option

a. Must complete one of:

Math 374	Combinatorics and Graph Theory
Math 451	Complex Variables

b. Must complete one of:

Math 370	Topology
Math 465	Modern Algebra

Scientific Analyst Preparation Option

a. Must complete:

Ops Rsch 321	Probabilistic Models

b. Must complete one of:

Math 359	Design and Analysis of Experiments
Math 374	Combinatorics and Graph Theory
Ops Rsch 411	Topics in Mathematical Programming
Econ 465	Introduction to Econometrics
Comp Sci 362	Computer Simulation

c. We highly recommend students taking the Scientific Analyst Preparation Option use Ops Rsch 310 as their core Sci/Tech Energy/Systems Option.

d. Ops Rsch 419 and Ops Rsch 420 will replace Math 420 and Math 421 as major's capstones for students taking the Scientific Analyst Preparation Option.

SUGGESTED COURSE SEQUENCE

Mathematics Major

	4°	hrs	per	3°	hrs	per	2°	hrs	per	1°	hrs	per
	For Lang 1	3	2	Math 243	3	1	Math 346	3	1	Math Option #1	3	1
	Beh Sci 110	3	1	**Law 220**	3	1	Math 366	3	1	Math 342	3	2
Fall	**History 100**	3	1	**Engr Mech 220**	3	1	Math 377	3	1	Math 420	3	1
	Math 141	3	1	**Econ 201**	3	1	**Philos 310**	3	1	Math Open Option	3	1
	Comp Sci 110	3	1	**Physics 215**	3	2	**Beh Sci 310**	3	1	**MSS 415/416**	3	1
	Phy Ed	0.5	2	**English 211**	3	1	**ECE 315**	3	1	**Soc Sci 412**	3	1
		15.5	8	*Phy Ed*	1	2	*Phy Ed*	1	2	*Phy Ed*	0.5	2
					19	9		19	8		18.5	9
	For Lang 2	3	2	Math 245	3	1	Math 360	3	1	Math Option #2	3	2
	Chem 100	3	2	Math 320	3	1	**Sys Opt Ops Rsch 310**	3	1	Math 421	3	1
Spring	**Engr 101**	3	1	Comp Sci 211	3	1	**Math 378**	3	1	***Academy Option***	3	1
	English 111	3	1	**Pol Sci 211**	3	1	**Biology 315**	3	2	**English 411**	3	1
	Math 142	3	1	**Chem 200**	3	2	**Aero Engr 315**	3	1	**Astro Engr 410**	3	1
	Physics 110	3	2	**MSS 200**	3	1	**History 300**	3	1	**Mgt 400**	3	1
	Phy Ed	0.5	2	*Phy Ed*	0.5	2	*Phy Ed*	0.5	2	*Phy Ed*	0.5	2
		18.5	11		18.5	9		18.5	9		18.5	9

Course Unit Summary
Core (32)
Major (14)
Academy Option (1)
Phy Ed (10)

Semester Hour Summary		
Core =	**96.0**	Sem Hours
Major =	42.0	"
Academy Option =	3.0	"
Phy Ed =	5.0	"
Total =	**146.0**	"

MECHANICAL ENGINEERING

THE MECHANICAL ENGINEERING MAJOR AT A GLANCE: If you want to design and build things, then you should consider majoring in Mechanical Engineering. Mechanical Engineering is, more than anything else, the engineering of systems. Systems are interactions of components, power, and information. There are incredible mechanical engineering systems in aerospace and automotive hardware, power generation facilities, and manufacturing. Because systems bring together the engineering of mechanics and motion, thermodynamics and fluids, materials and structures, and control, Mechanical Engineering is a broad discipline of design and analysis. If you aren't sure what engineering discipline to pursue right now and you want to keep your options open, this broad-based foundational major may be perfect for you. Mechanical Engineering is also flexible to allow you to focus in many important disciplines, such as fatigue/fracture mechanics and failure analysis. If understanding, building, and using state-of-the-art materials such as composites and ceramics intrigues you or designing and analyzing structures is your desire focus, this challenging major may be right for you. The USAFA Mechanical Engineering degree is accredited by the Engineering Accreditation Commission of ABET, http://www.abet.org.

The Goal of the Department of Engineering Mechanics, which administers the Mechanical Engineering Program, is to *Educate Engineers for the Military Profession*. To ensure the success of our graduates, we prepare them to attain *Program Educational Objectives* two to five years after graduation. These are:

1) Recognition as successful Air Force officers through demonstration of their ability to:
   a. Rapidly acquire required knowledge.
   b. Lead others effectively.
   c. Effectively apply ethical and moral standards.
   d. Improve unit performance by application of organizational skills.
   e. Make sound decisions based on critical thinking.
   f. Communicate effectively.
2) Selection for career training on, or ahead of, schedule, and for a progression of assignments of increasing responsibility.
3) A demonstrated ability to solve Air Force technical problems.
4) Success in continuing education.

The foundation that prepares graduates for attaining the *Program Educational Objectives* is provided by *Student Outcomes*. *Student Outcomes* describe what students must attain prior to graduation. These relate to the skills, knowledge, and behaviors that students acquire as they progress through the program. These *Student Outcomes* are:

1) an ability to apply knowledge of mathematics, science, and engineering
2) an ability to design and conduct experiments, as well as to analyze and interpret data
3) an ability to design a system, component, or process to meet desired needs within realistic constraints such as economic, environmental, social, political, ethical, health and safety, manufacturability, and sustainability

4) an ability to lead and function on multidisciplinary teams
5) an ability to identify, formulate, and solve engineering problems
6) an understanding of professional and ethical responsibility
7) an ability to communicate effectively both written and orally
8) the broad education necessary to understand the impact of engineering solutions in a military, global, economic, environmental, and societal context
9) a recognition of the need for, and an ability to engage in life-long learning
10) a knowledge of contemporary issues
11) an ability to use the techniques, skills, and modern engineering tools necessary for engineering practice

Incorporated within these outcomes, mechanical engineering majors must apply principles of engineering, basic science, and mathematics (including multivariate calculus and differential equations) to model, analyze, design, and realize physical systems, components or processes; and work professionally in both thermal and mechanical systems areas. In addition, graduates must demonstrate design competence that includes integration of mechanical engineering topics.

With a degree in Mechanical Engineering you can get an Air Force assignment as a mechanical engineer, aeronautical engineer, civil engineer, astronautical engineer, or project engineer. The Mechanical Engineering degree also satisfies the educational requirements for Air Force Test Pilot, Flight Test Navigator, and Flight Test Engineer duties. Additional specialties are Scientific Analyst and Acquisition Project Officer. Successful completion of this degree may qualify you for assignment in the 62H (Developmental Mechanical Engineer) career field.

If you are a top performer in the Mechanical Engineering major, graduate school can be an option as a first Air Force assignment, either through direct departmental sponsorship or by winning a prestigious national scholarship (Draper, Hertz, Rhodes, etc.). The Mechanical Engineering major gives you the flexibility to pursue either a more specialized degree in graduate school or to continue your broad-based study in engineering. Whether you ultimately choose a graduate program in mechanical engineering, aeronautical engineering, astronautical engineering, or materials engineering, your decision will be an informed one.

COURSE REQUIREMENTS: 147 Semester Hours

A. *96 Semester hours of Dean's academic core courses to include the following core substitutes:*

Required Core Substitute		**Substitutes for**
ECE 231	Differential Equations with Circuit Applications I	ECE 315
Math 356	Probability and Statistics for Engineers and Scientists	Math 300
Mech Engr 312	Thermodynamics	Systems Option
Core Replacement		**Replaces**
Mech Engr 491	Capstone Design Project I	Mgt 400

B. *5 Semester hours of Director of Athletics core courses.*

C. *3 Semester hours of Academy Option (Mech Engr Option I for accreditation requirements).*

D. *42 Semester hours of major's courses:*

1. Math 243 (or Math 253) Calculus III (or Advanced Placed Calculus III)
2. Math 245 Differential Equations
3. Math 346 Engineering Math
4. Engr Mech 320 Dynamics
5. Engr Mech 330 Mechanics of Deformable Bodies
6. Engr Mech 460 Experimental Mechanics (See Supplemental Information 1)
7. Mech Engr 325 Engineering System Dynamics
8. Mech Engr 341 Fluid Mechanics
9. Mech Engr 370 Introduction to Machine Design
10. Mech Engr 492 Capstone Design Project II (See Supplemental Information 1)
11. Mech Engr Option II (See Supplemental Information 3)
12. - 14. Mech Engr Emphasis I – III (See Supplemental Information 4)
15. Engr Mech 305 Engineering Tools Seminar

Supplemental Information:

1. If planning a focus in certain areas, cadets may petition DFEM and other applicable departments for a waiver to substitute the capstone design sequence of another major, or an appropriate substitute for the Experimental Mechanics course.

2. The Mech Engr Option I is any 3-credit hour course in the Mechanical Engineering curriculum that has not been used to satisfy another curriculum requirement. This course fulfills the Academy Option.

3. The Mech Engr Option II is recommended as a 3-credit hour Independent Study (Mech Engr 499), but cadets may choose Mech Engr 495 (if offered), an Independent Study of 2-credit hours, Sys Engr 310, any 3-credit hour course in the Mechanical Engineering curriculum that has not been used to satisfy another curriculum requirement, or with Department Head approval any 300- or 400-level 3-credit hour course in the Engineering Division that has not been used to satisfy another curriculum requirement.

4. Cadets will choose from four Mechanical Engineering Emphasis Areas, and take a three course sequence from that area emphasizing traditional Mechanical Engineering specialties. Cadets are encouraged to schedule their Mech Engr Option I early in their program in order to explore their interests before committing to an Emphasis Area.

Emphasis Area	Course	Information
Structures	Engr Mech 332 (S)	Aerospace Structures *Prereq*: Engr Mech 330 *Coreq*: Aero Engr 315, Engr Mech 320
	Engr Mech 350 (B)	Mechanical Behavior of Materials *Prereq*: Engr Mech 330
	Engr Mech 421 (S)	Vibrations *Prereq*: Engr Mech 320 or Physics 355 *Coreq*: Math 346

	Engr Mech 431 (F)	Introduction to Finite Element Analysis *Prereq*: Engr Mech 330, Math 346
	Engr Mech 450 (F)	Aerospace Composite Materials *Prereq*: Engr Mech 330, Math 245
	Aero Engr 436 (S)	Aeroelasticity *Prereq:* Aero Engr 315, Engr Mech 330 *Coreq*: Engr Mech 320
Materials	Engr Mech 340 (S)	Materials Science for Engineers *Prereq*: Engr Mech 220
	Engr Mech 350 (B)	Mechanical Behavior of Materials *Prereq*: Engr Mech 330
	Engr Mech 440 (F)	Physical Metallurgy *Prereq*: Engr Mech 340
	Engr Mech 445 (S)	Failure Analysis and Prevention *Prereq*: Engr Mech 350 *Recommended*: Engr Mech 340
	Engr Mech 450 (F)	Aerospace Composite Materials *Prereq*: Engr Mech 330, Math 245
Dynamic Systems	Engr 341 (F)	Linear Systems Analysis and Design *Prereq*: ECE 231, Math 245
	Mech Engr 396 (F)	Mechatronics *Prereq*: ECE 231 (≥ B-)
	Engr Mech 421 (S)	Vibrations *Prereq*: Engr Mech 320 or Physics 355 *Coreq*: Math 346
	Aero Engr 436 (S)	Aeroelasticity *Coreq*: Aero Engr 315, Engr Mech 330 *Coreq*: Engr Mech 320
Thermal Fluid Science	Mech Engr 441 (F)	Heat Transfer *Prereq*: Math 346, Mech Engr 312, Mech Engr 341
	Mech Engr 467 (S)	Energy Conversion *Prereq*: Mech Engr 312, Mech Engr 341, or department approval
	Mech Engr 468 (S)	Renewable Energy *Prereq*: Mech Engr 312, Mech Engr 341, or department approval
	Aero Engr 361 (S)	Propulsion I *Prereq:* Aero Engr 241 or department approval

(F) – fall only, (S) – spring only, (B) – fall or spring

5. Engr Mech 220 should be taken in the second semester, but NLT the third semester.

SUGGESTED COURSE SEQUENCE

Mechanical Engineering Major

	4°	hrs	per	3°	hrs	per	2°	hrs	per	1°	hrs	per
	For Lang 1	3	2	Math 243	3	1	Engr Mech 305	1	1	Engr Mech 460	3	2
	Beh Sci 110	3	1	**English 211**	3	1	Engr Mech 320	3	1	Mech Engr Emphasis I	3	1
Fall	**Engr 101**	3	1	**Engr Mech 220**	3	1	**Mech Engr 312 (En/Sys**	3	1	Mech Engr Option II	3	1
	Math 141	3	1	**Econ 201**	3	1	Math 346	3	1	**English 411**	3	1
	Comp Sci 110	3	1	**Physics 215**	3	2	**History 300**	3	1	**Soc Sci 412**	3	2
	Phy Ed	0.5	2	**MSS 200**	3	1	**Beh Sci 310**	3	1	**Mech Engr 491**	3	2
		15.5	8	*Phy Ed*	1	2	**Biology 315**	3	1	*Phy Ed*	0.5	2
					19	9	*Phy Ed*	1	2		18.5	11
								20	9			
	For Lang 2	3	2	Math 245	3	1	Mech Engr 325	3	1	Mech Engr 492	3	2
	Chem 100	3	2	Engr Mech 330	3	1	Mech Engr 341	3	1	Mech Enger 370	3	1
Spring	**History 100**	3	1	**Pol Sci 211**	3	1	Mech Engr Option I	3	1	Mech Engr Emphasis II	3	1
	English 111	3	1	**Law 220**	3	1	**Aero Engr 315**	3	1	Mech Engr Emphasis III	3	1
	Math 142	3	1	**Chem 200**	3	2	**Philos 310**	3	1	**MSS 415/416**	3	1
	Physics 110	3	2	**ECE 231**	3	1	**Math 356**	3	1	**Astro Engr 410**	3	1
	Phy Ed	0.5	2	*Phy Ed*	0.5	2	*Phy Ed*	0.5	2	*Phy Ed*	0.5	2
		18.5	11		18.5	9		18.5	8		18.5	9

Course Unit Summary
Core (32)
Major (14)
Academy Option (1)
Phy Ed (10)

Semester Hour Summary		
Core =	**96.0**	Sem Hours
Major =	43.0	"
Academy Option =	3.0	"
Phy Ed =	5.0	"
Total =	**147.0**	"

METEOROLOGY

THE METEOROLOGY MAJOR AT A GLANCE: From planning deployments and air strikes to scheduling space launches and issuing proper protective clothing, weather considerations influence a great many of the decisions made by Air Force officers. Throughout history, weather has played a pivotal role in the outcome and execution of many important campaigns. The debacle of Napoleon's army in Russia, the scheduling of the Normandy invasion, and the destruction of Germany's count attack in the Battle of the Bulge, are but a few examples. Knowledge of the weather is still important in the modern battlefield.

Meteorology is the study of the atmosphere and the weather that it generates. Here at the Air Force Academy, the Meteorology major uniquely focuses on the impact of weather on military operations. The growth of meteorology and weather forecasting are intimately linked with the emergence and rise of aviation and apace power thorught the 20th and into the 21st century. The basic properties of the atmosphere and resulting weather phenomena are literally of life-and-death importance to pilots and consequently, to the Air Force. According to Sun Tzu, "…know the ground, know the weather; your victory will then be total."

The Meteorology major provides the knowledge and understanding necessary to analyze and predict atmospheric behavior over a broad range of time and space scales. These phenomena include small feature such as thunderstorms and tornadoes; medium-sized features such as squall lines, hurricanes and blizzards; and even larger features such as continental weather, waves in the jet stream, and climate change.

The Meteorology major requires a foundation in physics, geospatial science, mathematics, and an aptitude for problem solving. This interdisciplinary major is jointly administered by the Department of Physics (DFP) and the Department of Economics and Geosciences (DFEG). While graduates with a Meteorology major are academically qualified for direct entry into the weather career field including Special Operations weather support, the majority of Meteorology graduates enter rated career fields. The knowledge and experience gained from a better understanding of the atmosphere benefits them greatly throughout their career.

COURSE REQUIREMENTS: 146 Semester Hours

A. *96 Semester hours of Dean's academic core courses to include the following core substitute:*

Required Core Substitute		**Substitutes for**
Geo 310	Geospatial Information Analysis	Systems Option

B. *5 Semester hours of Director of Athletics core courses.*

C. *3 Semester hours of Academy Option.*

D. *42 Semester hours of major's courses*:

1. Math 243 (or Math 253) Calculus III (or Advanced Placed Calculus III)
2. Meteor 320 Introduction to Meteorology and Aviation Weather
3. Meteor 325 Weather Data, Analysis and Quantitative Methods
4. Meteor 330 Physical Meteorology I
5. Meteor 331 Physical Meteorology II
6. Meteor 352 Climatology
7. Meteor 430 Atmospheric Dynamics I
8. Meteor 431 Atmospheric Dynamics II
9. Meteor 440 Weather Analysis and Forecasting
10. Meteor 451 Synoptic Meteorology
11. Meteor 452 Mesoscale Meteorology

12-13. Two Meterology Elective courses from the following:

Math 245	Differential Equations
Physics 370	Upper Atmospheric and Geo-Space Physics
Meteor 499	Independent Study
Comp Sci 211	Introduction to Programming for Engineers and Scientists
Geo 351	Introduction to Physical Geography
Geo 382	Remote Sensing and Imagery Analysis
Physics 315	Combat Aviation Physics
Physics 375	Physics of Space Situational Awareness

Any 3 semester hour course taught within the Dean of Faculty at the 300- or 400-level and approved by the Meteorology AIC

14. Meteor 490 Meteorological Interpretation, Analysis, and Integration

SUGGESTED COURSE SEQUENCE

Meteorology Major

	4°	hrs	per	3°	hrs	per	2°	hrs	per	1°	hrs	per
	For Lang 1	3	2	Math 243	3	1	Meteor 325	3	1	Meteor 431	3	1
	Beh Sci 110	3	1	**MSS 200**	3	1	Meteor 330	3	1	Meteor 440	3	1
Fall	**History 100**	3	1	**Engr Mech 220**	3	1	**Beh Sci 310**	3	1	Meteor 451	3	1
	Math 141	3	1	**Econ 201**	3	1	**Math 300/356/377**	3	1	Meteorology Elective 1	3	1
	Comp Sci 110	3	1	**Physics 215**	3	2	**Philos 310**	3	1	**Astro Engr 410**	3	1
	Phy Ed	0.5	2	**English 211**	3	1	**Aero Engr 315**	3	1	**MSS 415/416**	3	1
		15.5	8	*Phy Ed*	1	2	*Phy Ed*	1	2	*Phy Ed*	0.5	2
					19	9		19	8		18.5	8
	For Lang 2	3	2	Meteor 320	3	1	Meteor 331	3	1	Meteor 452	3	1
	Chem 100	3	2	**Sys Opt Geo 310**	3	1	Meteor 352	3	1	Meteor 490	3	2
Spring	**Engr 101**	3	1	**Biology 315**	3	2	Meteor 430	3	1	Meteorology Elective 2	3	1
	English 111	3	1	**Pol Sci 211**	3	1	***Academy Option***	3	1	**Soc Sci 412**	3	1
	Math 142	3	1	**Law 220**	3	1	**ECE 315**	3	1	**English 411**	3	1
	Physics 110	3	2	**Chem 200**	3	2	**History 300**	3	1	**Mgt 400**	3	1
	Phy Ed	0.5	2	*Phy Ed*	0.5	2	*Phy Ed*	0.5	2	*Phy Ed*	0.5	2
		18.5	11		18.5	10		18.5	8		18.5	9

Course Unit Summary
Core (32)
Major (14)
Academy Option (1)
Phy Ed (10)

Semester Hour Summary		
Core =	**96.0**	Sem Hours
Major =	42.0	"
Academy Option =	3.0	"
Phy Ed =	5.0	"
Total =	**146.0**	"

MILITARY & STRATEGIC STUDIES

THE MILITARY & STRATEGIC STUDIES MAJOR AT A GLANCE: Your ability to think strategically and creatively when faced with the complex operational challenges of the twenty-first century security environment determines your effectiveness as an Air Force leader. The major in Military & Strategic Studies prepares you to lead and operate across the spectrum of conflict throughout the globe. Whether you make the Air Force a career, pursue other public service, or enter the private sector, this versatile major has direct relevance for your chosen profession and will help you develop the capabilities and mindset to compete successfully in a changing and challenging world.

The MSS major sharpens, expands, and integrates the knowledge, skills, and responsibilities learned in your first MSS core course on the context, theory, and application of air, space, and cyberspace power. Building upon that foundation, you pursue courses related to the uniquely demanding context of the military profession – morality and the human face of war, the future of the Air Force profession, comparative air forces, hybrid threats, societal and technical innovation, operational concepts, intelligence, and military strategies for joint, coalition, and interagency operations across diverse cultures. You will learn to think as an Air Force strategist, framing the battle space and evaluating theories, models, and perspectives for the artful future application of military and strategic power. You will learn to plan and think as a strategist and an operator, simulating effects-based strategies, modern weapons technologies, and a variety of threats.

In your second-class year, you will acquire a solid understanding of air, space, and cyber power theory. You will also select a research topic in our research methods course and, with the help of an advisor, design what will become your senior thesis or final Cadet Battle Laboratory project. As a first-class cadet, you will write the thesis or project with guidance from a faculty advisor and have an opportunity to publish your findings in our *Airman-Scholar Journal*. You will also take the advanced version of the final MSS core course on joint and coalition operations.

In addition to five required major's courses, you have the flexibility to choose six courses from among our strategy, theory, operational concepts and regional courses. Whatever your planned course of study, the MSS major will strengthen your problem solving and decision making skills, and directly prepare you to excel in the Air Force mission and beyond.

COURSE REQUIREMENTS: 146 Semester Hours

A. *96 Semester hours of Dean's academic core courses to include the following core substitutes:*

Required Core Substitute		**Substitutes for**
Geo 310	Geospatial Information Analysis	Systems Option
MSS 410	Joint Operations Strategy and ISR Integration	MSS 415/416

B. *5 Semester hours of Director of Athletics core courses.*

C. *3 Semester hours of Academy Option.*

D. *42 Semester hours of major's courses:*

1. – 5. 15 Semester hours of Professional Context (five courses):

Philos 311	War, Morality, and the Military Profession (spring)
MSS 365	Developing the Air Force Strategist (spring)
MSS 379	Research Methods in Military & Strategic Studies (fall)
MSS 450	Toward New Horizons in Military & Strategic Power (fall)
MSS 498	Capstone Thesis in Military & Strategic Studies (spring (See Supplemental Information)

6. – 11. 18 Semester hours of Military Theory and Operational Application (six courses):

Strategy (select 2 courses)

MSS 360	Comparative Air Forces (spring)
MSS 362	Military Innovation and Transformation (fall)
MSS 363	Irregular Warfare and Armed Groups (fall)
MSS 367	Weapons of Mass Effect (spring)

Domains (select between 1-3 courses)

MSS 470	Information and Cyberspace Operations (spring)
MSS 477	Airpower for Combined Effects (spring)
MSS 480	Operational Art in Surface Warfare (fall)
MSS 485	Space as an Element of National power (spring)

Regions (select between 1-3 courses)

MSS 490	Military Stategies of Asia and the Pacific (spring, even)
MSS 491	Military Strategies of the Western Hemisphere (spring, odd)
MSS 493	Military Strategies of Europe and Russia (fall, even)
MSS 494	Military Strategies of Africa and the Greater Middle East (fall, odd)

12. 3 Semester hours of elective (taught within the Dean of Faculty at the 300- or 400-level)

13. – 14. Foreign Language III & IV

Supplemental Information:

1. In coordination with the FAS Working Group, cadets double majoring in MSS and ForArStu can use MSS 379 and MSS 498, respectively, to satisfy the ForArStu Research Methods and Integrating Experience major requirements.

SUGGESTED COURSE SEQUENCE

Military & Strategic Studies Major

	4°	hrs	per	3°	hrs	per	2°	hrs	per	1°	hrs	per
	For Lang 1	3	2	For Lang 3	3	1	MSS 379	3	1	MSS 450	3	1
	Beh Sci 110	3	1	**Engr Mech 220**	3	1	MSS Strategy 1	3	1	MSS Strategy 2	3	1
Fall	**English 111**	3	1	**Econ 201**	3	1	**Aero Engr 315**	3	1	MSS Elective	3	1
	Math 141	3	1	**Physics 215**	3	2	**Philos 310**	3	1	**English 411**	3	1
	Engr 101	3	1	**English 211**	3	1	**Beh Sci 310**	3	1	**Astro Engr 410**	3	1
	Phy Ed	0.5	2	**MSS 200**	3	1	**Math 300**	3	1	**MSS 410**	3	1
		15.5	8	*Phy Ed*	1	2	*Phy Ed*	1	2	*Phy Ed*	0.5	2
					19	9		19	8		18.5	8
	For Lang 2	3	2	For Lang 4	3	1	MSS Region 1	3	1	MSS Domain 2	3	1
	Chem 100	3	2	MSS 365	3	1	MSS Domain 1	3	1	MSS Region 2	3	1
Spring	**Comp Sci 110**	3	1	**Law 220**	3	1	**Biology 315**	3	2	MSS 498	3	1
	History 100	3	1	**Chem 200**	3	2	**ECE 315**	3	1	**Academy Option**	3	1
	Math 142	3	1	**Pol Sci 211**	3	1	**Sys Opt Geo 310**	3	1	**Soc Sci 412**	3	1
	Physics 110	3	2	***Academy Option***	3	1	**History 300**	3	1	**Mgt 400**	3	1
	Phy Ed	0.5	2	*Phy Ed*	0.5	2	*Phy Ed*	0.5	2	*Phy Ed*	0.5	2
		18.5	11		18.5	9		18.5	9		18.5	8

Course Unit Summary
Core (32)
Major (14)
Academy Option (1)
Phy Ed (10)

Semester Hour Summary		
Core =	**96.0**	Sem Hours
Major =	42.0	"
Academy Option =	3.0	"
Phy Ed =	5.0	"
Total =	**146.0**	"

OPERATIONS RESEARCH MAJOR

THE OPERATIONS RESEARCH MAJOR AT A GLANCE: Operations Research (OR) is the application of quantitative techniques to managerial decision-making. To gain an appreciation for the field, it is necessary to look at the origins of Operations Research.

OR, as a discipline, arose from the need to determine optimal resource allocation and assist decision makers during the Second World War. Groups of mathematicians, physical scientists, and economists were assembled during the war to perform studies that would provide quantitative input for commanders. The results of their efforts were impressive and, soon thereafter, the commercial sector realized the power of these new planning techniques.

The use of mathematics to model real world systems was nothing new; physicists and economists had been doing this for years. What defined this new field called OR was its focus on the operations of organizations. Not only were traditional mathematical modeling methods used, such as statistics and probability, but new modeling methods were created, such as mathematical programming and queuing theory.

Operation Research, therefore, entails the development and application of quantitative modeling methods to real management and economics problems. This is an exciting field and one that attracts curious problem-solvers who are strong in mathematics and computer science and are eager to solve real world problems.

The description of Operations Research provided above highlights OR's interdisciplinary nature. USAFA has captured the essence of the field by establishing a truly interdisciplinary major. The OR program is jointly administered by the Departments of Management, Mathematical Sciences, Computer Science, and Economics and Geosciences. In addition to the basic set of OR courses, your required major's courses will include courses from each of the four departments.

COURSE REQUIREMENTS: 146 Semester hours

A. *96 Semester hours of Dean's academic core courses to include the following core substitutes:*

Required Core Substitute		**Substitutes for**
Ops Rsch 310	Systems Analysis	Systems Option
Math 378	Advanced Statistics	Math 300

B. *5 Semester hours of Director of Athletics core courses.*

C. *3 Semester hours of Academy Option.*

D. *42 Semester hours of major's courses:*

1. Comp Sci 211 — Intro to Programming for Scientists and Engineers
2. Comp Sci 362 — Computer Simulation

3. Econ 465	Introduction to Econometrics
4. Econ 466	Forecasting and Model Building
5. Math 243 (or Math 253)	Calculus III (or Advanced Placed Calculus III)
6. Math 344	Matrices and Differential Equations
7. Math 377	Advanced Probability
8. Ops Rsch 321	Probabilistic Models
9. Ops Rsch 330	Economic Theory and Operations Analysis
10. Ops Rsch 411	Topics in Mathematical Programming
11. Ops Rsch 419	Capstone in Operations Research I
12. Ops Rsch 420	Capstone in Operations Research II
13. Ops Rsch Option I	(See Supplemental Information)
14. Ops Rsch Option II	(See Supplemental Information)
Ops Rsch 405	Operations Research Seminar

Supplemental Information:

Ops Rsch Options: Choose two (2) of the following:

Comp Sci 364	Information Storage and Retrieval
Econ 411	Introduction to Game Theory
Econ 377	Financial Markets
Math 359	Design and Analysis of Experiments
Mgt 478	Supply Chain Management
Mgt 477	Production and Operations Management
Ops Rsch 417	Quick-Turn Analysis
Ops Rsch 495	Special Topics
Sys Engr 310	Introduction to Systems Engineering

*Other courses allowed by approval of the Ops Rsch AIC and ORWG (Operations Research Working Group)

SUGGESTED COURSE SEQUENCE

Operations Research Major

	4°	hrs	per	3°	hrs	per	2°	hrs	per	1°	hrs	per
	For Lang 1	3	2	Math 243	3	1	Comp Sci 211	3	2	Econ 465	3	1
	Beh Sci 110	3	1	**Law 220**	3	1	Ops Rsch 411	3	1	Ops Rsch 419	3	2
Fall	**History 100**	3	1	**Engr Mech 220**	3	1	Math 377	3	1	Ops Rsch Option 1	3	1
	Math 141	3	1	**Econ 201**	3	1	**Beh Sci 310**	3	1	***Academy Option***	3	1
	Comp Sci 110	3	1	**Physics 215**	3	2	**Philos 310**	3	1	**Astro Engr 410**	3	1
	Phy Ed	0.5	2	**Pol Sci 211**	3	1	**Aero Engr 315**	3	1	**Mgt 400**	3	1
		15.5	8	*Phy Ed*	1	2	*Phy Ed*	1	2	*Phy Ed*	0.5	2
					19	9		19	9		18.5	9
	For Lang 2	3	2	Math 344	3	1	Ops Rsch 330	3	1	Econ 466	3	1
	Chem 100	3	2	**Sys Opt Ops Rsch 310**	3	1	Comp Sci 362	3	1	Ops Rsch 420	3	2
Spring	**Engr 101**	3	1	**English 211**	3	1	Ops Rsch 321	3	1	Ops Rsch Option 2	3	1
	English 111	3	1	**MSS 200**	3	1	**Math 378**	3	1	**Soc Sci 412**	3	1
	Math 142	3	1	**Chem 200**	3	2	**History 300**	3	1	**English 411**	3	1
	Physics 110	3	2	**ECE 315**	3	1	**Biology 315**	3	2	**MSS 415/416**	3	1
	Phy Ed	0.5	2	*Phy Ed*	0.5	2	*Phy Ed*	0.5	2	*Phy Ed*	0.5	2
		18.5	11		18.5	9		18.5	9		18.5	9

Course Unit Summary
Core (32)
Major (14)
Academy Option (1)
Phy Ed (10)

Semester Hour Summary		
Core =	**96.0**	Sem Hours
Major =	42.0	"
Academy Option =	3.0	"
Phy Ed =	5.0	"
Total =	**146.0**	"

PHILOSOPHY

THE PHILOSOPHY MAJOR AT A GLANCE: The word "philosophy" derives from a Greek work meaning the *love of wisdom*. In pursuit of wisdom students of philosophy attempt to answer fundamental questions about the nature of reality, knowledge, and value. Since antiquity, however, philosophers have reminded us that academic study alone cannot make one wise; life experience must complement the knowledge gained by study. Further, many philosophers have insisted that wisdom as a cardinal virtue cannot exist independently of the other three cardinal virtues – courage, temperance, and justice. The spirit of philosophy is accordingly summed up well by Plato's Socrates. On trial for his life and under pressure to desist from his philosophical investigations, Socrates instead proclaimed that "…for a human being the unexamined life is not worth living." He went to his death apparently content that he had served his fellow citizens and lived the life most worth living. USAFA philosophy majors will undertake their study of philosophy as part of a life of energetic inquiry aimed at developing the virtues appropriate to a leader of character. They will read and discuss primary texts from ancient times up to the present day.

COURSE REQUIREMENTS: 146 Semester hours

A. *96 semester hours of Dean's academic core courses.*

B. 5 Semester hours of Director of Athletics courses.

C. *3 Semester hours of Academy Option.*

D. *42 Semester hours of major's courses:*

1. Philos 311 War, Morality, and the Military Profession

2. Philos 370 Introduction to Symbolic Logic

3. Philos 391/2/3/4 unless the student has already completed Philos 390; in that case Philos 390 satisfies this requirement

4. Philos 401 Comparative Religion

5. Philos 495 Special Topics for philosophy majors

6-11. Philosophy Option 1-6. Consistent with DF's emphasis on multiple purposeful pathways, each of these options can be filled in three ways:

a. "Neat": take any 3-semester hour course taught by DFPY

b. "With a twist": take Pol Sci 301, Pol Sci 451, Pol Sci 463, and/or Econ 240; or with prior DFPY approval, take any 3-semester hour course taught by DF that focuses on "overlap" texts commonly read by another discipline as well as philosophy. In this case,

DFPY advisors will probably look for a pairing (e.g., an English 495 on American Transcendentalism with Philosophy 382, American Philosophy, for 6 semester hours of Philosophy Option credit).

c. "With a splash": with prior DFPY approval, take any course taught by DF or academic course taught by AD (e.g., Phy Ed Aca 460) and pair it with a Philosophy 499 for 6 semester hours of Philosophy Option credit (e.g., Biology 459, Principles of Evolution, paired with a Philos 499 on philosophy of biology; History 352, The History of Modern America, paired with a Philos 499 on American Pragmatism).

12. Open academic option.

13-14. Foreign language III and IV.

SUGGESTED COURSE SEQUENCE

Philosophy Major

	4°	hrs	per	3°	hrs	per	2°	hrs	per	1°	hrs	per
	For Lang 1	3	2	For Lang 3	3	1	Philos 39x	3	1	Philos Option 2	3	1
	Beh Sci 110	3	1	**MSS 200**	3	1	Phil 401	3	1	Philos Option 3	3	1
Fall	**History 100**	3	1	**Engr Mech 220**	3	1	**History 300**	3	1	Philos Option 4	3	1
	Math 141	3	1	**Econ 201**	3	1	**Biology 315**	3	2	*Academy Option*	3	1
	Comp Sci 110	3	1	**Physics 215**	3	2	**Beh Sci 310**	3	1	**MSS 400**	3	1
	Phy Ed	0.5	2	**Pol Sci 211**	3	1	**ECE 315**	3	1	**Soc Sci 412**	3	1
		15.5	8	*Phy Ed*	1	2	*Phy Ed*	1	2	*Phy Ed*	0.5	2
					19	9		19	9		18.5	8
	For Lang 2	3	2	For Lang 4	3	1	Philos 311	3	1	Philos Option 5	3	1
	Chem 100	3	2	Philos 370	3	1	Philos 495	3	1	Philos Option 6	3	1
Spring	**Engr 101**	3	1	**Philos 310**	3	1	Philos Option 1	3	1	Open Academic Option	3	1
	English 111	3	1	**Law 220**	3	1	**Geo 310**	3	1	**English 411**	3	1
	Math 142	3	1	**Chem 200**	3	2	**Math 300**	3	1	**Astro Engr 410**	3	1
	Physics 110	3	2	**English 211**	3	1	**Aero Engr 315**	3	1	**Mgt 400**	3	1
	Phy Ed	0.5	2	*Phy Ed*	0.5	2	*Phy Ed*	0.5	2	*Phy Ed*	0.5	2
		18.5	11		18.5	9		18.5	8		18.5	8

Course Unit Summary
Core (32)
Major (14)
Academy Option (1)
Phy Ed (10)

Semester Hour Summary		
Core =	**96.0**	Sem Hours
Major =	42.0	"
Academy Option =	3.0	"
Phy Ed =	5.0	"
Total =	**146.0**	"

PHILOSOPHY MINOR

THE PHILOSOPHY MINOR AT A GLANCE: The Philosophy minor requires a minimum of 147 hours and four philosophy courses in addition to Philos 310. Because philosophy courses can often be used to fulfill major's requirements in other disciplines, the Philosophy minor can sometimes be earned by taking only one or two additional courses.

"Philosophy" is not another discipline. Rather, it is rational inquiry into any discipline (e.g., philosophy of psychology, philosophy of history, philosophy of law). Philosophers seek answers to the basic, fundamental questions which underpin any field of study. In addition to the questions addressed in the core course about how we should live our lives, philosophers also study: principles of language and reasoning (logic); foundations of empirical discovery and other ways of knowing (epistemology); and the ultimate underpinnings and structure of the self and the world (metaphysics).

COURSE REQUIREMENTS:

In addition to the successful completion of Philos 310 ("C" or better), four courses (12 semester hours) in which the student earns a grade of "C" or better. Required courses include:

1. One course in the history and topics series, unless the student has already completed Philos 390.

Philos 391	Ancient Western Philosophy
Philos 392	Western Medieval Philosophy
Philos 393	Modern Western Philosophy
Philos 394	Contemporary Topics in Philosophy

2. One of the following logic courses:

Philos 360	Applied Reasoning
Philos 370	Introduction to Symbolic Logic

3. Any philosophy course.

4. Any philosophy course or one of the following courses: Econ 240, Pol Sci 301, Pol Sci 451, or Pol Sci 463.

WHY STUDY PHILOSOPHY? Philosophy is an ancient and valuable sub district within the vast marketplace of ideas. It is concerned with the most interesting questions in life--the questions that are fundamental and the least easy to answer or avoid. All cadets are required to take a course in ethics, which is the discipline concerned with answering the questions: What is a good act? What sort of person is the best person? What is truly valuable? By what principles should life be led? Obviously, philosophy is not for everyone. It is not for those who want easy answers, nor is it for those who do not care about the deeper meanings of life or the purpose of their own lives. It is for those who wish to gain a more thorough understanding of themselves as rational, reflective beings inhabiting and working in a world that sometimes allows us to glimpse its deeper meanings.

PHYSICS

THE PHYSICS MAJOR AT A GLANCE: Physics involves the study of the small and very small (atoms, molecules, nuclei, and elementary particles), the large and very large (the Earth, Moon, solar system, stars, galaxies, and the universe), the strange (black holes, anti-matter, and superconductivity), the common (swings on playgrounds, springs, and wheels), the relevant (space systems sensors and the motions of aircraft and satellites), and just about anything else! In other words, the scope of physics is limited only by the imagination of the physicist. Because the scope of physics is so broad, a physicist must be a generalist who can see the underlying connections between diverse topics. As a result, the Physics major concentrates on the basic physical and mathematical principles that help us understand the world. This is also why the Physics major is so flexible; your vision can help you design a Physics sequence that fits your role as an Air Force officer. The Physics curriculum blends traditional academic instruction, practical laboratory work and independent research projects to develop your ability to think creatively and analytically.

The Physics major has a reputation for being challenging, but its rewards are great. It will prepare you for a successful career in the increasingly technical Air Force, and reward you with satisfaction in mastering a rigorous, demanding discipline. Physics is never obsolete; it forms the foundation upon which new technologies rest. Whether operational or scientific in nature, the technical innovations in today's Air Force have physics as their fundamental element.

COURSE REQUIREMENTS: 146 Semester Hours

A. *96 Semester hours of Dean's academic core courses to include the following core substitutes:*

Required Core Substitute		**Substitutes for**
Physics 421	Thermal and Statistical Physics	Systems Option
ECE 231	Differential Equations with Circuit Applications I	ECE 315
Math 356	Probability and Statistics for Engineers and Scientists	Math 300

B. *5 Semester hours of Director of Athletics core courses.*

C. *3 Semester hours of Academy Option.*

D. 9 *Semester hours in Applied Mathematics as follows*:

1. Math 243 (or Math 253) Calculus III (or Advanced Placed Calculus III)
2. Math 245 Differential Equations
3. Math 346 Engineering Mathematics

E. *24 Semester hours in Physics:*

1. Physics 264 Modern Physics
2. Physics 341 Laboratory Techniques
3. Physics 355 Classical Mechanics

4. Physics 356 Computational Physics
5. Physics 361 Electromagnetic Theory I
6. Physics 362 Electromagnetic Theory II
7. Physics 405* Physics Seminar
8. Physics 465 Quantum Mechanic
9. Physics 490 Capstone Physics Research

* Physics 405 must be taken concurrently with Physics 490

F. 9 *Semester hours in one of the following options*. Most of our Physics majors align themselves with one of the following options:

Astronomy:

1. Physics 371 Astronomy
2. Physics 486 Astrophysics
3. One of the following: Physics 370/Physics 375/Physics 391/Physics 499/Math 469

Laser Physics/Optics:

1. Physics 391 Introduction to Optics and Lasers
2. Physics 482 Laser Physics and Modern Optics
3. One of the following: Physics 375/Physics 393/Physics 468/Physics 499/Math 469

Space Physics:

1. Physics 370 Upper Atmospheric and Geo-Space Physics
2. Physics 451 Plasma Physics
3. One of the following: Physics 375/Astro Engr 436/Physics 499/Math 469

Applied Physics Option:

You may also propose a sequence of your own by selecting at least three courses (9 semester hours) from the Department of Physics or other Academy academic departments. It is *your* responsibility to identify and justify a coherent three-course sequence in an area related to basic sciences or engineering. You may take more than three courses if your schedule permits in order to delve more deeply into a subject of interest. Normally, at least two of the selected courses must be 300-level or higher and one must be a 400-level course. All applied physics option sequences must be approved by the Department of Physics AIC and the department's Director of Advanced Programs.

Some possible sequences are shown below:

Aircraft Propulsion Design: Aero Engr 241/Aero Engr 361/Aero Engr 466
Atmospheric Physics: Meteor 330/Meteor 331/Meteor 430
Materials Physics: Physics 393/Engr Mech 340/Engr Mech 440
Mathematical Physics: three of Math 344/Math 451/Math 468/Math 469/Math 470
*Medical Physics (pre-med)**: Chem 233/Chem 234/Chem 243/Biology 431
Space Vehicle Design: Physics 370 or Astro Engr 331/Astro Engr 436/Astro Engr 437

*Four concentration courses are required for pre-med students and should be taken by the end of the 2° year.

SUGGESTED COURSE SEQUENCE

Physics Major

	4°	hrs	per	3°	hrs	per	2°	hrs	per	1°	hrs	per
	For Lang 1	3	2	Math 243	3	1	Math 346	3	1	Physics 465	3	1
	Beh Sci 110	3	1	**MSS 200**	3	1	Physics 355	3	1	Physics Conc #1	3	1
Fall	**Chem 100**	3	2	**Chem 200**	3	2	Physics 361	3	1	***Academy Option***	3	1
	Math 141	3	1	**Econ 201**	3	1	**Biology 315**	3	2	**English 411**	3	1
	Comp Sci 110	3	1	**Physics 215**	3	2	**Math 356**	3	1	**Sys Opt Physics 421**	3	1
	Phy Ed	0.5	2	**English 211**	3	1	**Beh Sci 310**	3	1	**Soc Sci 412**	3	1
		15.5	9	*Phy Ed*	1	2	*Phy Ed*	1	2	*Phy Ed*	0.5	2
					19	10		19	9		18.5	8
	For Lang 2	3	2	Math 245	3	1	Physics 341	3	2	Physics 490	3	2
	History 100	3	1	Physics 264	3	1	Physics 356	3	1	Physics Conc #2	3	1
Spring	**Engr 101**	3	1	**Pol Sci 211**	3	1	Physics 362	3	1	Physics Conc #3	3	1
	English 111	3	1	**Law 220**	3	1	**Aero Engr 315**	3	1	**MSS 415/416**	3	1
	Math 142	3	1	**Engr Mech 220**	3	1	**History 300**	3	1	**Astro Engr 410**	3	1
	Physics 110	3	2	**ECE 231**	3	1	**Philos 310**	3	1	**Mgt 400**	3	1
	Phy Ed	0.5	2	*Phy Ed*	0.5	2	*Phy Ed*	0.5	2	Physics 405 (Seminar)	0	1
		18.5	10		18.5	8		18.5	9	*Phy Ed*	0.5	2
											18.5	10

Course Unit Summary
Core (32)
Major (14)
Academy Option (1)
Phy Ed (10)

Semester Hour Summary		
Core =	**96.0**	Sem Hours
Major =	42.0	"
Academy Option =	3.0	"
Phy Ed =	5.0	"
Total =	**146.0**	"

POLITICAL SCIENCE

THE POLITICAL SCIENCE MAJOR AT A GLANCE: The Political Science major offers a course of studies tailored to the needs of prospective Air Force officers by providing a comprehensive understanding of both the substance and process of politics and public policy. The major is uniquely capable of preparing cadets to comprehend the political events, both domestic and international, that will shape their careers. It accomplishes this by examining topics such as political theories and ideologies, comparative politics, international relations, American politics, international security, defense decision-making, the politics of foreign governments, organizational behavior, and political economy.

The Political Science major is very flexible. The major allows cadets to study areas in-depth or to examine a variety of political topics. In addition, cadets who wish to earn a Foreign Language minor may take all four required upper-level (200-level or above) language courses within the Political Science major. A Philosophy minor can be earned with minimal extra classes, as well. The major offers four areas of concentration: American politics, international politics, comparative politics and area studies, and national security policy. Cadets can also work with their advisors to tailor an academic program to meet their individual needs.

COURSE REQUIREMENTS: 146 Semester Hours

A. *96 Semester hours of Dean's academic core courses.*

Required Core Substitute		**Substitutes for**
Soc Sci 212	Geopolitics	Soc Sci 412

B. *5 Semester hours of Director of Athletics core courses.*

C. *3 Semester hours of Academy Option.*

D. *42 Semester hours of major's courses*:

1. Pol Sci 300 — Introduction to Political Science: Overview and Methods
2. Pol Sci 301 — Political Theory
3. Pol Sci 302 — American Foreign and National Security Policy

4.-6. Select one course from each of the following three baskets:

American Government	Pol Sci 392, Pol Sci 482, Pol Sci 483, Pol Sci 484
International Relations	Pol Sci 390, Pol Sci 444, Pol Sci 445, Pol Sci 496
Comparative Politics	Pol Sci 394, Pol Sci 460, Pol Sci 464

7. Pol Sci 491 — Capstone Seminar in Political Science

8.-11. Pol Sci Option — Any Pol Sci course, or ForArStu 400, ForArStu 410, ForArStu 420, ForArStu 430, or ForArStu 440. Options 3 and 4 may also include Macroeconomics (Econ 301) or Regional History courses (History 340, 341, 342, 343, 344, 345, 346, 347, 373, 374, or 375).

(See Supplemental Info 1)

12. Soc Sci/Hum Option Any Soc Sci or Hum course (may be For Lang)

(See Supplemental Info 2)

13.-14. Foreign Language III and IV.

Supplemental Information:

1. Cadets pursuing a Philosophy minor may fill one Pol Sci Option with Philos 311, Philos 382, Philos 391/2/3/4, Philos 395, Philos 401, or Philos 402.

2. Cadets pursuing a Foreign Language minor must complete twelve semester hours in residence at the 200-level or above in the same language.

SUGGESTED COURSE SEQUENCE

Political Science Major

	4°	hrs	per	3°	hrs	per	2°	hrs	per	1°	hrs	per
Fall	**For Lang 1**	3	2	For Lang 3	3	1	Pol Sci 300	3	1	Pol Sci Basket 3	3	1
	Beh Sci 110	3	1	**Soc Sci 212**	3	1	Pol Sci 301	3	1	Pol Sci Option	3	1
	History 100	3	1	**Engr Mech 220**	3	1	**ECE 315**	3	1	Pol Sci Option	3	1
	Math 141	3	1	**Econ 201**	3	1	**Biology 315**	3	2	Soc Sci / Hum Option	3	1
	Comp Sci 110	3	1	**Physics 215**	3	2	**Philos 310**	3	1	***Academy Option***	3	1
				Pol Sci 211	3	1	**Beh Sci 310**	3	1	**MSS 415/416**	3	1
	Phy Ed	0.5	2	*Phy Ed*	1	2	*Phy Ed*	1	2	*Phy Ed*	0.5	2
		15.5	8		19	9		19	9		18.5	8
Spring	**For Lang 2**	3	2	For Lang 4	3	1	Pol Sci 302	3	1	Pol Sci 491	3	2
	Chem 100	3	2	**History 300**	3	1	Pol Sci Basket 1	3	1	Pol Sci Option	3	1
	Engr 101	3	1	**MSS 200**	3	1	Pol Sci Basket 2	3	1	Pol Sci Option	3	1
	English 111	3	1	**Law 220**	3	1	**Sys Opt**	3	1	**English 411**	3	1
	Math 142	3	1	**Chem 200**	3	2	**Math 300**	3	1	**Astro Engr 410**	3	1
	Physics 110	3	2	**English 211**	3	1	**Aero Engr 315**	3	1	**Mgt 400**	3	1
	Phy Ed	0.5	2	*Phy Ed*	0.5	2	*Phy Ed*	0.5	2	*Phy Ed*	0.5	2
		18.5	11		18.5	9		18.5	8		18.5	9

Course Unit Summary
Core (32)
Major (14)
Academy Option (1)
Phy Ed (10)

Semester Hour Summary		
Core =	**96.0**	Sem Hours
Major =	42.0	"
Academy Option =	3.0	"
Phy Ed =	5.0	"
Total =	**146.0**	"

RELIGION STUDIES MINOR

THE RELIGION STUDIES MINOR AT A GLANCE: Students minoring in Religion Studies will consider questions ranging from the abstract (How might we define "religion"?) to the concrete (What distinguishes Sunni from Shia Islam?). The study of religions is important to develop understanding of cultural and ethical issues within the United States and around the world. As human interaction becomes more global and as our US military finds itself serving in foreign countries with peoples of varied religious beliefs, cadets need to understand religion as a critical aspect of international, multi-cultural operating environments. Studying religion will also help cadets gain a better understanding of their own beliefs and worldviews, allowing them to engage more knowledgeably and respectfully with others.

COURSE REQUIREMENTS:

Cadets will earn the minor by completing five courses (15 semester hours):

1. Three required courses (nine semester hours) that provide a basic understanding of the concept of religion and of faith traditions around the world:
   Philos 401: Comparative World Religions (or another course approved by Humanities and Social Science Division Chairs)
   Philos 402: Philosophy of Religion (or another course approved by Humanities and Social Science Division Chairs)
   Hum/SocSci 495: Religion Studies Capstone Project (to be completed last)

2. Two elective courses (six semester hours) that broaden students' understanding of religion in the context of their academic majors.

   a. Courses offered in the current curriculum will count if the owning department head, Humanities Division, and Social Sciences Division concur that they offer substantial insight into the nature and practice of religion:
      Behavioral Science: sociology, personality, social psychology, biopsychology—depending on section and syllabus
      English: literature courses, depending Oil the syllabus in a given semester
      History: any course might count depending on the syllabus that semester, e.g.:
      History 325: History of Christianity
      History 340: History of Colonial Latin America
      History 342: History of Traditional Asia
      History 344: Foundations of European History
      History 346: History of Russia
      History 347: History of Modern Russia
      History 373: History of Sub-Saharan Africa
      History 374: Foundations of Middle Eastern History
      History 480: Studies in American Civilization
      Hum 430: The Holocaust
      Hum 461: Russian Literature

Hum 463: Far Eastern Literature
Law 351: U.S. Constitutional Law
Law 360: Law and Literature
Mgt 440: Managerial Lessons in Literature
Philos 382: American Philosophy
Philos 392: Medieval Philosophy

SPACE OPERATIONS

THE SPACE OPERATIONS MAJOR AT A GLANCE: The Space Operations major is an interdisciplinary program with primary emphasis on preparing cadets for a career in space operations. The major is designed to develop Air Force officers with a technical background in space and an understanding of contemporary problems and issues peculiar to space. Course work in science, geospatial science, mathematics, and astronautics provides the technical background required for this field. Coupled with courses in space history, law, policy, and military doctrine, this program provides the breadth of education required for this growing field. The Space Operations major also provides the student with excellent preparation for entering a graduate program in Space Systems or Space Operations.

Space operations are the backbone of Air Force Space Command and are vital to our nation's warfighting capabilities. This program gives you the chance to directly apply what you learn in your major to an Air Force career. The Space Operations major will give you a solid framework for your future Air Force career whether it is in space or as a pilot. In addition, this major serves as an excellent foundation for graduate studies in such fields as space operations, space systems management, space technology, communications, computer systems, remote sensing, operations research, and business administration.

COURSE REQUIREMENTS: 146 Semester Hours

A. *96 Semester hours of Dean's academic core courses to include the following core substitutes:*

Required Core Substitute		**Substitutes for**
Geo 310	Geospatial Information Analysis	Systems Option
Astro Engr 210	Introduction to Astronautics	Astro Engr 410
Math 356	Probability and Statistics for Engineers and Scientists	Math 300

B. *5 Semester hours of Director of Athletics core courses.*

C. *3 Semester hours of Academy Option.*

D. *42 Semester hours of major's courses*:

1. Astro Engr 331 — Space Systems Engineering
2. Geo 382 — Remote Sensing and Imagery Analysis
3. Geo 482 — Advanced Remote Sensing
4. Sys Engr 310 — Introduction to Systems Engineering
5. MSS 365 — Developing the Air Force Strategist
6. MSS 485 — Space as an Element of National Power
7. Pol Sci 465 — US National Space Policy
8. Meteor 320 — Introduction to Meteorology and Aviation Weather
9. History 376 — A History of Space Power
10. Ops Rsch 310 — Systems Analysis
11. Astro Engr 436 — Small Spacecraft Engineering I

12. Astro Engr 437	Small Spacecraft Enginnering II
13. Space Operations Specialty	(See Supplemental Information)
14. Space Operations Specialty	(See Supplemental Information)

Supplemental Information:

Space Operations Specialty (choose two of the following courses).

Physics 310 (S)	Principles of Nuclear Engineering
Physics 371 (F)	Astronomy
Chem 325	Space Chemistry
Chem 350	Chemistry of Weapons
Math 243 (F/S)	Calculus III (Prereq: C or better in Math 142)
Math 245 (F/S)	Differential Equations

SUGGESTED COURSE SEQUENCE

Space Operations Major

	4°	hrs	per	3°	hrs	per	2°	hrs	per	1°	hrs	per
	For Lang 1	3	2	Ops Rsch 310	3	1	Astro Engr 331	3	2	Astro Engr 436	3	2
	Beh Sci 110	3	1	**MSS 200**	3	1	MSS 365	3	1	MSS 435	3	1
Fall	**History 100**	3	1	**Engr Mech 220**	3	1	**Biology 315**	3	2	Pol Sci 465	3	1
	Math 141	3	1	**Law 220**	3	1	**History 300**	3	1	Space Ops Specialty 2	3	1
	Comp Sci 110	3	1	**Physics 215**	3	2	**Pol Sci 211**	3	1	**Philos 310**	3	1
				Econ 201	3	1	**Math 356**	3	1	**MSS 415/416**	3	1
	Phy Ed	0.5	2	*Phy Ed*	1	2	*Phy Ed*	1	2	*Phy Ed*	0.5	2
		15.5	8		19	9		19	10		18.5	9
	For Lang 2	3	2	Meteor 320	3	1	History 376	3	1	Astro Engr 437	3	2
	Chem 100	3	2	Space Ops Specialty 1	3	1	Sys Engr 310	3	1	Geo 482	3	1
Spring	**Engr 101**	3	1	**English 211**	3	1	Geo 382	3	1	***Acadmy Option***	3	1
	English 111	3	1	**Astro Engr 210**	3	1	**Aero Engr 315**	3	1	**Soc Sci 412**	3	1
	Math 142	3	1	**Chem 200**	3	2	**Sys Opt Geo 310**	3	1	**English 411**	3	1
	Physics 110	3	2	**ECE 231**	3	1	**Beh Sci 310**	3	1	**Mgt 400**	3	1
	Phy Ed	0.5	2	SPACE 350/461	0	1	SPACE 473	0	1	*Phy Ed*	0.5	2
		18.5	11	*Phy Ed*	0.5	2	*Phy Ed*	0.5	2		18.5	9
					18.5	10		18.5	9			

Course Unit Summary
Core (32)
Major (14)
Academy Option (1)
Phy Ed (10)

Semester Hour Summary		
Core =	**96.0**	Sem Hours
Major =	42.0	"
Academy Option =	3.0	"
Phy Ed =	5.0	"
Total =	**146.0**	"

SYSTEMS ENGINEERING

THE SYSTEMS ENGINEERING MAJOR AT A GLANCE: Systems Engineering is a broad discipline that addresses the engineering of large, complex systems. The system engineer (SE) designs, integrates, and helps to ensure smooth functioning of complex systems typical in today's high-tech Air Force. The SE is a "big picture" engineer, always keeping an eye on the design of the overall system to ensure that it will meet the needs of all the system's stakeholders, including operators, maintainers and commanders, and our ultimate customer -- the American public!

The SE must consider the entire lifecycle of the system: design, development, verification, manufacturing, deployment, training, operations, support, and disposal. Therefore, SEs must have technical competence augmented by studies in human factors engineering, operations research, system simulation, and program management.

Systems Engineering (SE) is an interdisciplinary major administered by the Head, Systems Engineering (Engineering Division). It is supported by the Systems Engineering Working Group (SEWG) and the Departments of Aeronautical Engineering, Astronautical Engineering, Behavioral Sciences and Leadership, Computer Science, Electrical and Computer Engineering, and Engineering Mechanics with participation by the Department of Management. Cadets who successfully complete the Systems Engineering program are awarded a Bachelor of Science in Systems Engineering accredited by the Engineering Accreditation Commission of ABET, http://www.abet.org.

To ensure the success of our graduates, we prepare them to attain the following *Program Educational Objectives* two to five years after graduation:

Recognition as successful Air Force officers through demonstration of their ability to:
Rapidly acquire required knowledge,
Lead others effectively,
Effectively apply ethical and moral standards,
Make sound decisions based on critical thinking, and
Communicate effectively.
Selection for career training on, or ahead of, schedule and for a progression of assignments of increasing responsibility
A demonstrated ability to solve Air Force technical problems
Success in continuing education.

To support these goals, our program's curriculum is designed such that, by completion of our program, our graduates shall demonstrate that they have attained the following *Student Outcomes:*

an ability to apply knowledge of mathematics, science, and engineering
an ability to design and conduct experiments, as well as to analyze, and interpret data

an ability to design a system, component, or process to meet desired needs within realistic constraints such as economic, environmental, social, political, ethical, health and safety, manufacturability, and sustainability

- an ability to function on multi-disciplinary teams
- an ability to identify, formulate, and solve engineering problems
- an understanding of professional and ethical responsibility
- an ability to communicate effectively
- the broad education necessary to understand the impact of engineering solutions in a global, economic, environmental, and societal context
- a recognition of the need for, and an ability to engage in life-long learning
- a knowledge of contemporary issues
- an ability to use the techniques, skills, and modern engineering tools necessary for engineering practice.

COURSE REQUIREMENTS: 146 semester hours

A. *96 Semester hours of Dean's academic core courses including the following core alternates:*

Required Core Substitute		**Substitutes for**
Ops Rsch 310	Systems Analysis	Energy Systems Opt
ECE 231	Differential Equations with Circuit Applications I	ECE 315
Math 356	Prob. & Stat.s for Engineers and Scientists	Math 300
Sys Engr 301	Project Management	Mgt 400

B. *5 Semester hours of Director of Athletics core courses.*

C. *3 Semester hours of Academy Option* (Comp Sci 211 for accreditation requirements).

D. *6 Semester hours of math courses*

1. Math 344 or 245
2. Math 359, Math 243 or Math 253

E**.** *18 Semester hours of major's courses:*

1. Sys Engr 310	Introduction to Systems Engineering
2. Sys Engr 311	Systems Engineering II: Analytic Techniques for Sys Engr
3. Ops Rsch 321	Probabilistic Models
4. Sys Engr 336	Engineering Economics and Financial Management
5. Beh Sci 373	Introduction to Human Factors Engineering
6. Sys Engr 405	Systems Engineering Seminar I
7. Sys Engr 406	Systems Engineering Seminar II *
8. Sys Engr 477	Operations Engineering and Management

** In addition, Sys Engr 402 Professional Systems Engineering Development (ASEP exam prep) is a recommended course for all Systems Engineering cadets to take concurrently with Sys Engr 406*

F. *12 Semester hours of courses selected from the cadet's choice of depth option area:*

The available course list for each depth option is managed and vetted by the respective host departments. Cadets will take a set of four courses from any one depth area or a coherent set of four courses from the below options with approval of the systems engineering program director. The four courses shall include a minimum of 6 engineering semester credits, as defined by the Engineering Accreditation Commission of ABET. A superscript "M" denotes a course that is mandatory for any cadet taking courses in the respective depth option area.

Aeronautical:

Engr Mech 320	Dynamics
Aero Engr 241	Aero-Thermodynamics
Aero Engr 341	Aeronautical Fluid Dynamics
Aero Engr 351	Aircraft Performance and Static Stability
Aero Engr 352	Aircraft Dynamic Stability and Control
Aero Engr 361	Propulsion

Astronautical:

Engr Mech 320	Dynamics
Aero Engr 241	Aero-Thermodynamics
Astro Engr 321	Astrodynamics
Astro Engr 331	Space Systems Engineering
Astro Engr 351	Rocket Propulsion
Astro Engr 423	Space Mission Design

Computer:

Comp Sci 210	Introduction to Programming^{M}
Comp Sci 220	Data Abstraction
Comp Sci 351	Computer Organization and Architecture
Comp Sci 364	Information Storage and Retrieval
Comp Sci 467	Networks

Electronics:

ECE 281	Introductory Digital Systems^{M}
ECE 321	Electronics I
ECE 322	Electronics II
ECE 332	Electric Circuits and Systems II
ECE 382	Computer Architecture and Microcontrollers
ECE 383	Microcomputer System Design I
ECE 387	Robotic Systems
ECE 434	Discrete-Time Signals & Systems
ECE 485	Computer Architecture

Engr 311	Electrical Power

Human Factors:

Beh Sci 375	Human Factors in Aviation Systems Engineering
Sys Engr 470	Human Systems Integration
Beh Sci 471	Engineering Psychology
Beh Sci 473	Human Factors in Systems Design

Mechanical:

Engr Mech 330	Aerospace Structures[M]
Mech Engr 312	Thermodynamics
Engr Mech 320	Dynamics
Mech Engr 325	Engineering System Dynamics
Engr Mech 350	Mechanical Behavior of Materials
Mech Engr 370	Introduction to Machine Design
Mech Engr 396	Mechatronics

Organizational Analytics:*

Ops Rsch 330	Optimization Theory with Microeconomic Applications
Ops Rsch 411	Topics in Mathematical Programming
Ops Rsch 417	Quick Turn Analysis
Mgt 303	Management Perspectives
Mgt 341	Financial Accounting
Mgt 342	Managerial Accounting
Mgt 345	Human Managerial Systems
Mgt 375	Market Analysis
Mgt 478	Supply Chain Management

** Note: Cadets choosing this depth option will take 3 courses with operations research designators or at most 2 courses with management designators. The remaining depth option(s) must be approved engineering courses.*

G. *6 Semester hours of Capstone Courses*

Sys Engr 491	Systems Engineering Capstone Design I
Sys Engr 492	Systems Engineering Capstone Design II

To satisfy the Systems Engineering Capstone Design sequence requirement, cadets will enroll in Sys Engr 491/92 and be assigned to one of the following two-semester capstone design options based on interest, depth option selection, and capstone needs.

Course Suffix	**Design Focus**	**Fall Course**	**Spring Course**	**Host Dept**
A1	Aircraft	Aero Engr 481	Aero Engr 482	DFAN
A2	Jet Engine	Aero Engr 481	Aero Engr 483	
B	Spacecraft	Astro Engr 436	Astro Engr 437	DFAS

C	Software	Comp Sci 453	Comp Sci 454	DFCS
E	Electronic/Computer	ECE 463	ECE 464	DFEC
H	Mechanical	Mech Engr 491	Mech Engr 492	DFEM
M	Technology Innovation	Mgt 419	Mgt 420	DFM
O	Analytics	Ops Rsch 419	Ops Rsch 420	DFM

Capstone course titles:

Aero Engr 48	*Intro to Aircraft and Propulsion System Design*
Aero Engr 482	*Aircraft Design*
Aero Engr 483	*Aircraft Engine Design*
Astro Engr 436	*Small Spacecraft Engineering I*
Astro Engr 437	*Small Spacecraft Engineering II*
Comp Sci 453	*Software Engineering I*
Comp Sci 454	*Software Engineering II*
ECE 463	*Capstone Design Project I*
ECE 464	*Capstone Design Project II*
Mech Engr 491	*Capstone Design Project I*
Mech Engr 492	*Capstone Design Project II*
Mgt 419	*Technological Innovation Management*
Mgt 420	*Systems Research and Development Management*
Ops Rsch 419	*Capstone in Operations Research I*
Ops Rsch 420	*Capstone in Operations Research II*

SUGGESTED COURSE SEQUENCE

Systems Engineering Major

	4°	hrs	per	3°	hrs	per	2°	hrs	per	1°	hrs	per
Fall	**Math 141**	3	1	**Law 220**	3	1	**Math 356**	3	1	**MSS 416**	3	1
	Engr 101	3	1	**English 211**	3	1	**ECE 231**	3	1	**Biology 315**	3	2
	Comp Sci 110	3	1	**Econ 201**	3	1	**Beh Sci 310**	3	1	Beh Sci 373	3	1
	English 111	3	1	**Engr Mech 220**	3	1	**History 300**	3	1	Sys Engr 477	3	1
	For Lang 1	3	2	**Physics 215**	3	2	Sys Engr 310	3	2	Depth Option 3	3	1
	Phy Ed	0.5	2	**Pol Sci 211**	3	1	Depth Option 1	3	1	Sys Engr 491	3	2
		15.5	8	*Phy Ed*	1	2	*Phy Ed*	1	2	Sys Engr 405	0	1
					19	9		19	9	*Phy Ed*	0.5	2
											18.5	11
Spring	**Math 142**	3	1	**Aero Engr 315 or 210**	3	1	**Sys Engr 301**	3	1	**Soc Sci 412**	3	1
	Physics 110	3	2	**MSS 200**	3	1	Math 359 or 243	3	1	**Astro Engr 410**	3	1
	History 100	3	1	**Chem 200**	3	2	Ops Rsch 321	3	1	**English 411**	3	1
	Beh Sci 110	3	1	**Ops Rsch 310**	3	1	Sys Engr 336	3	1	**Philos 310**	3	1
	Chem 100	3	2	Math 344 or 245	3	1	Sys Engr 311	3	1	Depth Option 4	3	1
	For Lang 2	3	2	***Comp Sci 211***	3	2	Depth Option 2	3	1	Sys Engr 492	3	2
	Phy Ed	0.5	2	*Phy Ed*	0.5	2	*Phy Ed*	0.5	2	Sys Engr 406/402	0	1
		18.5	11		18.5	10		15.5	7	*Phy Ed*	0.5	2
											18.5	10

Course Unit Summary
Core (33)
Major (14)
Academy Option (1)
Phy Ed (10)

Semester Hour Summary		
Core =	**96.0**	Sem Hours
Major =	**42.0**	"
Academy Option =	3.0	"
Phy Ed =	5.0	"
Total =	**146.0**	"

CHAPTER 11

BACHELOR OF SCIENCE PROGRAM

THE BACHELOR OF SCIENCE PROGRAM AT A GLANCE: The Bachelor of Science Program (BSP) provides a broad educational foundation for graduation and subsequent service as a professional AF officer, without specialization in a particular academic discipline. The BSP provides for maximum flexibility in selecting advanced courses for depth and/or breadth beyond core requirements. Successful completion of this program results in a Bachelor of Science degree. The Bachelor of Science Program is not a major. The BSP can only be declared through DFR or ARC Chair recommendation, with DFV approval, no earlier than a cadet's third semester. The Office of Student Academic Affairs administers the BSP.

COURSE REQUIREMENTS: 131 Semester Hours

A. *96 Semester hours of Dean's academic core courses.*

B. *5 Semester hours of Director of Athletics core courses.*

C. *3 Semester hours of Academy Option.*

D. *27 Semester Hours of additional coursework*

1. – 8. Academic Division Option
9. Academic Division/Open Option

SUGGESTED COURSE SEQUENCE

Bachelor of Science Program

	4°	hrs	per	3°	hrs	per	2°	hrs	per	1°	hrs	per
Fall	**For Lang 1**	3	2	Academic Div Option	3	1	Academic Div Option	3	1	Academic Div Option	3	1
	Beh Sci 110	3	1	Academic Div Option	3	1	**Biology 315**	3	2	Academic Div Option	3	1
	History 100	3	1	**Econ 201**	3	1	**Philos 310**	3	1	**Soc Sci 412**	3	1
	Math 141	3	1	**Physics 215**	3	2	**ECE 315**	3	1	**MSS 415/416**	3	1
	Comp Sci 110	3	1	**English 211**	3	1	**History 300**	3	1	**English 411**	3	1
	Phy Ed	0.5	2	**MSS 200**	3	1	*Phy Ed*	0.5	2	*Phy Ed*	1	2
		15	6	*Phy Ed*	1	2		15.5	8		16	7
					19	9						
Spring	**For Lang 2**	3	2	Academic Div Option	3	1	Academic Div Option	3	1	Academic Div Option	3	1
	Chem 100	3	2	**Chem 200**	3	2	**Aero Engr 315**	3	1	Acad Div/Open Option	3	1
	Engr 101	3	1	**Pol Sci 211**	3	1	**Math 300/356/378**	3	1	***Academy Option***	3	1
	English 111	3	1	**Law 220**	3	1	**Beh Sci 310**	3	1	**Astro Engr 410**	3	1
	Math 142	3	1	**Engr Mech 220**	3	2	**S/T Energy Sys Option**	3	1	**Mgt 400**	3	1
	Physics 110	3	2	*Phy Ed*	0.5	2	*Phy Ed*	0.5	2	*Phy Ed*	0.5	2
	Phy Ed	0.5	2		15.5	9		15.5	7		15.5	7
		18.5	11									

Course Unit Summary
Core (32)
Bach Sci (9)
Academy Option (1)
Phy Ed (10)

Semester Hour Summary		
Core =	**96.0**	Sem Hours
Major =	27.0	"
Academy Option =	3.0	"
Phy Ed =	5.0	"
Total =	**131.0**	"

SECTION III

CHAPTER 12

COURSE DESCRIPTIONS

Descriptions of courses offered are listed here by subject in alphabetical order. Course numbers have a general meaning. The first digit of a course number normally indicates the class year for which the course is designed: 100 series for the fourth-class year, 200 series for the third-class year, 300 series for the second-class year, and 400 series for the first-class year.

Following the title of each course is a code, such as 3(2). The number before the parentheses is the semester-hour value, used to determine a cadet's semester course load and minimum graduation requirements. A "0" before the parentheses means the course has no semester-hour value. The number within the parentheses is a code indicating the contact hours and scheduling pattern for the course as follows:

CONTACT HOURS AND SCHEDULING PATTERN CODES

CONTACT HOURS	SCHEDULING PATTERN
0	Course not scheduled by DFRR; cadet, instructors, and department make individual arrangements
1	One 53-minute period per lesson (every other day)
1x	One 53-minute period per lesson (every other day) for part of a semester
2	One 113-minute period per lesson (every other day)
2'	Two 53-minute periods per lesson (one every day)
2x	Two 53-minute periods per lesson (one every day) for part of a semester
2"	One 113-minute period each odd lesson, each even lesson, or once per week
2xx	One 113-minute period per lesson (every other day) for part of a semester
3	One 173-minute period per lesson (every other day)
3x	One 173-minute period per lesson (one every day) for part of a semester

A "*" designation on the right side of the parentheses means an honors version of the course is

offered. Not all honors versions are offered both fall and spring semesters. Final examination or final report requirements, course prerequisites, semester hours and offering times are shown at the end of each course description. A number of academic courses are offered in both the fall and spring semesters.

NOTE: Double-period academic core courses may utilize the second hour of a lesson a maximum of 10 times per semester. Exemptions may be granted only by the Curriculum Committee. DFF has a temporary exemption for core foreign language courses.

AERONAUTICS (Aero Engr)
Offered by the Department of Aeronautics (DFAN)

Aero Engr 210. Fundamentals of Aeronautics. 3(1). Introduction to aircraft design, fluid mechanics, airfoil and wing aerodynamics, steady and accelerated aircraft performance, with special emphasis on computer programming using MatLab. Interdisciplinary design synthesis, analysis, and decision-making (including economic, political, and other non-technical considerations) of an aircraft to meet a contemporary requirement. This course is intended for cadets who have declared or are considering declaring the major in Aero Engr. Final exam. Prereq: Comp Sci 110 and Engr 101 and DFAN Department Head approval. Sem hrs: 3 fall or spring.

In addition, this course/program is a primary contributor to the development and assessment of the following USAFA outcomes:

Skills: Quantitative Literacy, Oral Communication, Decision Making
Knowledge: Heritage and Application of Air, Space, and Cyberspace Power; Principles of Engineering and Application of Technology

Aero Engr 241. Aero-Thermodynamics. 3(1). Fundamentals of the 1st and 2nd laws of thermodynamics applied to systems and control volumes. Foundations in heat transfer. Control volume approaches to the equations of motion of a fluid. Applications of gas dynamics to incompressible and compressible flows through nozzles, diffusers, and turbomachinery. Isentropic flows to include Prandtl-Meyer expansions, and non-isentropic flows to include normal and oblique shocks, and flows with simple friction and heat transfer. Foundations in engineering problem solving. Final exam. Prereq: Physics 110. Sem hrs: 3 spring.

In addition, this course/program is a primary contributor to the development and assessment of the following USAFA outcomes:

Skills: Information Literacy

Aero Engr 315. Fundamentals of Aeronautics. 3(1). Introduction to aircraft design, fluid mechanics, airfoil and wing aerodynamics, steady and accelerated aircraft performance, and stability and control. Interdisciplinary design synthesis, analysis, and decision-making (including economic, political, and other non-technical considerations) of an aircraft to meet a contemporary requirement. Final exam. Prereq: Comp Sci 110. Coreq: Engr Mech 220. Sem hrs: 3 fall or spring.

In addition, this course/program is a primary contributor to the development and assessment of the following USAFA outcomes:

Skills: *Quantitative Literacy, Oral Communication, Decision Making*
Knowledge: *Heritage and Application of Air, Space, and Cyberspace Power; Principles of Engineering and Application of Technology*

Aero Engr 315Z. Fundamentals of Aeronautics – French language section. 3(1). Section taught in French; available for students qualified for Aero Engr 315 and having successfully completed or validated French 321; counts as a course for the French Language Minor and for a major's foreign language requirement. Requires DFF approval. Final exam. Prereq: Comp Sci 110 and Engr Mech 220. Sem hrs: 3 fall or spring.

In addition, this course/program is a primary contributor to the development and assessment of the following USAFA outcomes:

Skills: *Quantitative Literacy, Oral Communication, Decision Making*
Knowledge: *Heritage and Application of Air, Space, and Cyberspace Power; Principles of Engineering and Application of Technology*

Aero Engr 341. Aeronautical Fluid Dynamics. 3(1). Fluid properties, the basic equations of motion: the continuity equation, conservation of linear momentum, and conservation of energy (both the differential and the integral forms). Use of the integral momentum equation to experimentally determine the drag acting on a cylinder in a low-speed stream; spread-sheet computation of unsteady Poiseuille flow; spread-sheet computation of a steady, laminar boundary-layer; turbulent boundary-layer experiment. Stream functions. Potential functions. Final exam. Prereq: Aero Engr 241. Coreq: Math 346. Sem hrs: 3 fall.

Aero Engr 342. Computational Aerodynamics. 3(2). This course covers the theory and application of modern computational tools used to predict fluid flows around basic and complex geometries. The course is intended to give the student the necessary knowledge to choose the relevant computational tool and perform independent computational analysis of moderately complex geometries. The course will cover grid generation, computational fluid dynamic (CFD) solvers, and post-processing using state-of-the-art tools, as well as computational potential methods such as panel codes or vortex lattice codes. The course is project-oriented and explores the important concepts of temporal and spatial resolution, stability and convergence, and flow-field analysis. Final project or final exam. Prereq: Aero Engr 341 and Math 346. Sem hrs: 3 spring.

Aero Engr 351. Aircraft Performance and Static Stability. 3(1). Aircraft force, moment and response definition in various coordinate systems. Takeoff and landing, cruise, climbs, turns and other accelerated performance by both analytic and numerical methods. Static stability and control and related aircraft design considerations. Design project. Final exam. Prereq: Math 245, either Aero Engr 315 or Aero Engr 210, and Engr Mech 220. Sem hrs: 3 fall.

Aero Engr 352. Aircraft Dynamic Stability and Control. 3(1). Aircraft equations of motion. Examination of aircraft dynamic modes based on both limited and full degree of freedom models utilizing analytical and numerical methods. Aircraft design considerations. Determination and evaluation of aircraft flying qualities against military specifications. Application of control system theory to the design of aircraft stability augmentation systems and autopilots. Control system design project. Final exam. Prereq: Aero Engr 351 and Engr Mech 320. Sem hrs: 3 spring.

Aero Engr 361. Propulsion I. 3(1). Introduction to Brayton and jet engine cycles. Application of aero-thermodynamics to aircraft jet engines and major engine components. Overview of the design, performance, and applications of turboprops/shafts, turbofans, turbojets, ramjets, scramjets, and rockets. Focus on preliminary cycle analysis of aircraft gas turbine engines to include mission analysis, parametric cycle analysis, and engine performance analysis. Lab. Design project. Final exam. Prereq: Aero Engr 241 or department approval. Sem hrs: 3 spring.

Aero Engr 436. Aeroelasticity. 3(1). Aeroelastic phenomena of an aircraft in flight. Dyamic pressure, Mach and angle of attack effects on the bending and twisting of aircraft components. Aeroelastic equations and coefficients related to flight characteristics such as flutter and divergence. Design project and/or final exam. Prereq: Aero Engr 315 and Engr Mech 330. Coreq: Engr Mech 320. Sem hrs: 3 spring.

Aero Engr 442. Advanced Aerodynamics. 3(1). Analytical and numerical solution techniques applied to incompressible, compressible, transonic, and supersonic flight regimes over airfoils, wings, and bodies. Introduction to hypersonic aerodynamics. Techniques include those historically used in incompressible flow up to and including state-of-the-art supersonic solutions using high speed computers. Final exam. Prereq: Aero Engr 342. Sem hrs: 3 fall.

Aero Engr 446. Introduction to Hypersonics. 3(1). Analysis of heat transfer and high temperature effects on hypersonic vehicles. Application to reentry and transatmospheric vehicles. Final exam or final project. Prereq: Aero Engr 341. Sem hrs: 3 fall or spring.

Aero Engr 447. Advanced Applied Aerodynamics. 3(1). Advanced topics in steady and unsteady aerodynamics in all speed ranges are considered for study by analytical, experimental and computational methods. Final exam or final project. Coreq: Aero Engr 442. Sem hrs: 3 fall or spring.

Aero Engr 456. Flight Test Techniques. 3(2). Fundamental flight test methods for defining performance and flying qualities characteristics of fixed wing aircraft. Patterned after the Flight Test Engineer's Course at the USAF Test Pilot School. Students fly in designated aircraft to obtain flight test data. Final project or final exam. Prereq: Aero Engr 351 and department approval. Sem hrs: 3 fall or spring.

Aero Engr 456L. Flight Test Techniques Laboratory. 1(2). Application of fundamental flight test methods for defining the performance and flying qualities characteristics of high performance fixed wing aircraft. This laboratory experience serves as a final project for Aero Engr 456. Students receive credit for this course by participating in a field trip to Edwards AFB, flight test sortie in a high performance aircraft, creation of a written report, and presentation of a final briefing. This course will be scheduled during the same class period as Aero Engr 456. Coreq: Aero Engr 456 and department approval. Sem hrs: 1 fall or spring.

Aero Engr 457. Aircraft Feedback Control Systems. 3(1). Design and analysis of aircraft stability augmentation and automatic flight control systems by classical root locus and frequency

domain techniques. Introduction to digital system analysis. Analytical and numerical methods complemented with aircraft simulation. Final exam. Prereq: Aero Engr 352. Sem hrs: 3 fall.

Aero Engr 466. Propulsion II. 3(1). Analysis of advanced aircraft engines. Preliminary aerodynamic and structural design of major engine components including inlets, compressors, combustors, turbines, mixers, afterburners, and nozzles. Final exam. Prereq: Aero Engr 361. Sem hrs: 3 fall.

Aero Engr 471. Aeronautics Laboratory. 3(2). Introduction to experimental methods and techniques. Introduction to instrumentation and data acquisition systems. Statistical analysis of data. Selected experiments in the fields of aerodynamics, gas dynamics, propulsion, and flight mechanics. Labs. Final report. Prereq: Aero Engr 341 and ECE 231. Coreq: Math 356. Sem hrs: 3 fall or spring.

Aero Engr 472. Advanced Computational Aerodynamics. 3(1). Advanced theory and application of computational tools used to predict and analyze fluid flows of interest supporting USAF research, development, test, and evaluation programs. Working in teams, students will gain the necessary knowledge and background to make contributions using the DoD's High Performance Computing (HPC) Modernization Program resources. Projects will include investigation of unsteady flows, boundary layers, turbulence models, shocks, and multi-physics simulations. Final report. Prereq: Aero Engr 342. Sem hrs: 3 fall.

Aero Engr 481. Introduction to Aircraft and Propulsion System Design. 3(2). Fundamentals of aircraft and propulsion system design taught using a systems engineering approach. Aerodynamic design and drag prediction. Parameter effects on constraint analyses and preliminary weight estimation. Configuration optimization. Conceptual layout and preliminary analysis of aircraft structures. Factor and margin of safety. Material selection including strength, stiffness, weight, and cost considerations. Introduction to propulsion system design and selection criteria. Safety, reliability, maintainability, schedule and cost management concerns are addressed during the course. Final report. Prereq: Aero Engr 341 and Aero Engr 351. Coreq: Engr Mech 330 and Aero Engr 361. Sem hrs: 3 fall.

Aero Engr 482. Aircraft Design. 3(2). Design of an aircraft using a systems engineering approach to meet specifications provided. Detailed configuration optimization, aerodynamic analysis, structural layout, material selection, and structural component sizing, weight and center of gravity analysis, and stability and control analysis. Safety, reliability, maintainability, schedule, and cost management concerns are addressed. Final report. Prereq: Aero Engr 352, Aero Engr 481, and Aero Engr 342 (or department approval). Sem hrs: 3 spring.

Aero Engr 483. Aircraft Engine Design. 3(2). Preliminary design of an aircraft engine to meet specified performance requirements. Cycle selection, installation effects, and engine sizing. Determination of installed and uninstalled performance of selected and sized engine. Preliminary design of major engine components to include variable geometry inlets, fans, compressor, main burner, turbine, afterburner, and exhaust nozzles. Material selection for each component is accomplished based on criteria such as the stress and temperature environments, manufacturability, radar absorption capability, weight, and cost. Safety, reliability and

maintainability concerns during the design process are addressed throughout the course. This course will include, if possible, a voluntary field trip to a government/industry design facility. Final report. Prereq: Aero Engr 466 and Aero Engr 481. Sem hrs: 3 spring.

Aero Engr 495. Special Topics. 1-3(1-2). Selected topics in aeronautical engineering. Final exam or final report. Prereq: Department approval. Sem hrs: 1-3 fall or spring.

Aero Engr 499. Independent Study. 3(0). Individual study and research supervised by a faculty member. Topic established with the department head. Final report. Prereq: Department approval. Sem hrs: 3 fall or spring.

- Aero Engr 499A. Independent Study. 2(0). Sem hrs: 2 fall or spring.
- Aero Engr 499B. Independent Study. 1.5(0). Sem hrs: 1.5 fall or spring.
- Aero Engr 499C. Independent Study. 1(0). Sem hrs: 1 fall or spring.

AIRMANSHIP (Armnshp)

Offered by the 306 Flying Training Group (306 FTG)[NOTE: UAS-RPA programs are offered through DFEI until ~FY14]

Armnshp 200. Basic UAS-RPA Piloting. 0(2). Basic employment of UAS-RPA for Intelligence, Surveillance, and Reconnaissance Operations. Ground school and RPA flight training using actual small RPAs. Motivates cadets toward a career in the United States Air Force. Course includes general airmanship concepts, basic RPA piloting skills training, and an introduction to real-world RPA tactics, techniques, and procedures. The flying portion of this course includes approximately 7 sorties comprising 7 flight hours where cadets control UASs and UAS sensors using RPA strategies and procedures. Cadets may enroll in the summer (180 cadets), fall (A or B blocks with 36 cadets max per block), and spring (G or H blocks with 36 cadets max per block). Completion during summer before third-class year fills one military training requirement. Pass/fail. Prereq: Cadets must be medically cleared prior to enrollment and not on any probations. Physiological training must be accomplished prior to first day of class. Fourth-class cadets cannot take this course in their first semester. Sem hrs: 0 summer, fall, or spring.

Armnshp 201. Advanced UAS-RPA Piloting. 0(2x). Advanced employment of UAS-RPA for Intelligence, Surveillance, and Reconnaissance Operations. Part 1 of UAS-RPA cadet instructor upgrade training. This course further develops cadet understanding and piloting of Air Force remotely piloted aerial systems as an application of airpower. Stresses such fundamentals as airmanship, situational awareness, weapon and sensor platform capabilities and systems, mission applications, and operational risk and crew resource management. The course exposes cadets to a variety of tactical scenarios requiring the application of sound tactics, ROE, and moral decision making. The flying portion of this course includes approximately 10 sorties and 10 flight hours. The cadet learning experience is focused on developing and applying judgment during tactically realistic RPA/ISR missions. This course is offered in the first 20 lessons (1-20) of the fall semester. Final project. Pass/fail. Prereq: Armnshp 200 and UAS-RPA OIC approval. Sem hrs: 0 fall.

Armnshp 202X. Advanced UAS-RPA Instructor Pilot Training. 1.5(2). In this capstone course, cadets in the Remotely Piloted Aircraft (RPA) track will develop teaching and pilot instructor skills essential to accomplishing the RPA mission. The course consists of 20 lessons of RPA mission planning, flying, syllabus instruction, and evaluation. Scenarios emphasize fundamentals of instruction, critical thinking, and problem solving skills as cadets learn to make decisions based on training syllabus execution in a complex, non-static environment. Graduates are expected to serve as UAS-RPA instructor pilots 1 semester plus 1 summer period each year The course is offered in the last 20 lessons (21-40) of the spring semester. Final project. Prereq: Armnshp 201 and UAS-RPA OIC approval. Sem hrs: 1.5 spring.

Armnshp 251. Basic Soaring. 0(3). Ground school, sailplane flight training that supports USAFA Officer Development System outcomes and helps motivates cadets toward a career in the United States Air Force. Offered in the summer and both semesters during the academic day (periods 1-3 or 2-4). Completion during summer before third-class year fills one military training requirement. Pass/fail. Prereq: Cadets must be medically cleared prior to the first day of class. Sem hrs: 0 summer, fall, or spring. **)**

Armnshp 400. Cadet UAS-RPA Instructor. 0(2x). Selected cadets serve as instructors for Armnshp 200. Cadet UAS Instructors are not eligible to train as instructors in any other Academy Aviation or Airmanship courses. Completion during summer fulfills a military training leadership requirement. Pass/fail. Prereq: Armnshp 202 and UAS-RPA OIC approval. Sem hrs: 0 summer, fall, or spring.

Armnshp 401. Cadet UAS-RPA Upgrade Instructor. 0(2x). Select cadets serve as instructors for Armnshp 201 and Armnshp 202. Cadet UAS-RPA Instructors are not eligible to train as instructors in any other Academy Aviation or Airmanship courses. Completion during summer fulfills a military training leadership requirement. Pass/fail. Prereq: Armnshp 202 and UAS-RPA OIC approval. Sem hrs: 0 summer, fall, or spring.

Armnshp 402. Cadet UAS-RPA Unmanned Aerial Systems – Remotely Piloted Aircraft Competition Team. 0(0). Select cadets will compete in intercollegiate UAS-RPA flying competitions and/or support similar competitions at the JROTC/CAP level. Pass/Fail. Prereq: Armnshp 202 and UAS-RPA OIC approval. Sem hrs: 0 summer, fall or spring.

Armnshp 420. Powered Flight Program. 0(3x). The Powered Flight Program (PFP) serves as a capstone course/experience for cadets, tying together threads from across the core curriculum, focusing on orienting cadets toward the application of that background to airmanship and airpower concepts along with an exposure to a flying squadron environment. There are academic and flight components to the course with the potential for a pattern solo. PFP is available for all AFSCs, regardless of future career plans. Introductory Flight Screening (IFS) will continue to occur after graduation at Pueblo for cadets in flying career fields. PFP can be taken during the summer, spring, or fall by 2˚ and 1˚ beginning the fall of the 2˚ year. Cadets cannot be enrolled in other airmanship or flying programs while participating in PFP without specific approval from the Dean of Faculty, the Commandant of Cadets, and coordination with the 306 FTG. PFP consists of approximately 20 hours of classroom instruction (ground school and USAFA academics) and 13.5 hours of flying distributed across 9 sorties (10 sorties if the

cadet solos). When registering for this course, please indicate preference for first half (Armnshp 420) or second half (Armnshp 420X) of the semester. Summer PFP takes one summer period. Prereq: none. Pass/fail. Sem hrs: 0 summer, fall, or spring.

Armnshp 450. Airplane Rating, Private. 0(0). Dual and solo flight training to complete the requirements for an FAA Private Pilot Certificate. This training is conducted at the USAFA Aero Club at cadet expense (some subsidy is available from the Cadet Aviation Club). Formal course enrollment by academic advisor not required. Pass/fail. Sem hrs: 0 summer, fall, or spring.

Armnshp 460. Airplane Rating, Commercial. 0(1). Dual and solo flight training to complete the requirements for an FAA Commercial Pilot Certificate. This training is conducted at the USAFA Aero Club at the cadet's expense (some subsidy is available from the Cadet Aviation Club). Formal course enrollment by academic advisor not required. Prereq: Armnshp 450 or FAA Private Pilot Certificate. Pass/fail. Sem hrs: 0 summer, fall, or spring.

Armnshp 461. Cadet Soaring Instructor Upgrade. 3(3). Current ground school instruction consists of 19 classroom hours and is taught by 94 FTS officer personnel. The ground school lessons follow a sequential path for becoming a cadet instructor, starting with the basics of the airplane and finishing with fundamentals of instruction and instructor techniques. The flying portion of this course includes approximately 80 sailplane sorties and 24 flight hours. The course is offered in the fall and spring semesters of the third-class year (periods 5-7) and is a prerequisite to Armnshp 472/473/474/475. Spring semester Armnshp 461 normally includes a mandatory flight training deployment during Spring Break. Final project is a qualification check ride. Pass/fail. Sem hrs: 3 fall or spring.

Armnshp 465. Precision Flight Training – USAFA Flying Team. 0(2). Selected cadets receive training in precision landings, cross-country navigation, aircraft preflight, instrument flying, message drop, aircraft identification, Federal Aviation Regulations, Aeronautical Information Manual, and USAF flying regulations. Qualified cadets may participate in national and international flying competitions. During the first summer following their selection for the competitive team, cadets spend the third summer period qualifying in the team's aircraft. During the fall and spring semesters, the Flying Team is considered a mission essential activity. Armnshp 465X indicates Precision Flying Team tryouts. Pass/fail. Prereq: Federal Aviation Administration (FAA) Private Pilot Certificate, not on Academic Probation, minimum entry GPA 2.5 (sem or cum). Sem hrs: 0 summer, fall, or spring.

Armnshp 470. Airplane Rating, Instrument. 0(0). Dual flight instruction to complete the requirements for an FAA Instrument Pilot Rating. This training is conducted at the USAFA Aero Club at the cadet's expense (some subsidy is available from the Cadet Aviation Club). Formal course enrollment by academic advisor not required. Prereq: Armnshp 450 or FAA Private Pilot Certificate. Pass/fail. Sem hrs: 0 summer, fall, or spring.

Armnshp 472. Soaring Instructor. 0(3). Selected cadets serve as instructors in Armnshp 251 (periods 1-3 and 2-4). Completion during summer fulfills a military training leadership option. Cadets performing Cadet Soaring Instructor Duty will not be eligible to perform Aviation

Instructor Duty except by written permission of 94 FTS. Pass/fail. Prereq: Armnshp 461. Sem hrs: 0 summer, fall, or spring.

Armnshp 473. Cadet Soaring Instructor Duty. 0(3). Selected cadets serve as instructors in Armnshp 461 (periods 5-7). Cadets performing Cadet Soaring Instructor Duty will not be eligible to perform Aviation Instructor Duty except by written permission of 94 FTS and DFMI. Pass/fail. Prereq: Armnshp 472. Sem hrs: 0 fall or spring.

Armnshp 474. Cross Country Soaring. 0(3). Ground school to include regulations, planning, weather, thermalling techniques, competition rules, and equipment use (periods 5-7). Flight training includes precision and off field landings, thermalling techniques, and dual/solo cross-country and competition sorties. Training camp at a deployed location during 'Dead Week'. Qualified cadets may be selected to travel to regional and national cross-country soaring competitions. Third-class cadets will be scheduled for 2 summer periods of AM-474 plus Operation Air Force. Second-class team members will be scheduled for 2 summer periods of AM-474. Pass/fail. Prereq: Armnshp 472, selected by 94 FTS Advance Programs Commander. Sem hrs: 0 summer, fall, or spring.

Armnshp 475. Glider Aerobatics. 0(3). Ground and flight instruction to include spins, aerobatic maneuvers, precision flying techniques, and competition rules towards attaining USAFA Cadet Spin IP and Demonstration Pilot ratings (periods 2-4). Training camp at a deployed location during Spring Break. Qualified cadets may be selected to travel to regional and national aerobatic competitions, air shows, and participate in home football game aerial demonstrations as part of the Academy's Soaring Demonstration Team. Third-class cadets will be scheduled for 2 summer periods of AM-475 plus Operation Air Force. Second-class team members will be scheduled for 2 summer periods of AM-475. Pass/fail. Prereq: Armnshp 472, selected by 94 FTS Advanced Programs Commander. Sem hrs: 0 summer, fall, or spring.

Armnshp 480. Airplane Rating, Flight Instructor. 0(0). Dual flight training to complete the requirements for an FAA Flight Instructor, Airplane, Rating. This training is conducted at the USAFA Aero Club at the cadet's expense (some subsidy is available from the Cadet Aviation Club). Formal course enrollment by academic advisor not required. Prereq: Armnshp 460 or FAA Commercial Pilot Certificate. Pass/fail. Sem hrs: 0 summer, fall, or spring.

Armnshp 490. Basic Parachuting. 0(2). Instruction in basic free fall parachuting and familiarization with emergency parachuting. Successful completion results in award of the Air Force basic parachutist badge. Completion during summer before third-class year fills one military training requirement. Pass/fail. Prereq: Cadets must be medically cleared prior to enrollment and not on any probations. Saturday is a normal training day during the academic year course offering and should not be missed. The weight limit for participation in Armnshp 490 is 215 lbs. Sem hrs: 0 summer, fall, or spring.

Armnshp 491. Advanced Parachute/Jumpmaster/Instructor Training . 0(0) fall. 3(0) spring. Ground and aerial training which allows cadets to progress from initial free fall qualification to advanced free fall techniques, controlled body maneuvers, and precision landings. Introduces selected cadets to instructional techniques, jumpmaster procedures, and competitive parachuting.

Traning flows in a sequential path tot become a USAFA cadet jumpmaster and parachuting instructor. Participation in a spring training deployment is mandatory. Students must successfully complete a qualification checkride and a final written exam requiring 85% to pass. Cadets upgrading to Parachuting Instructor Duty are not eligible to enroll in any other Academy Aviation or Armnshp course during the same semester they are enrolled in AM-491. Pass/fail. Prereq: Armnshp 490, 98 FTS approval, not on any probation, AOC and academic advisor approval, minimum entry MPA 2.50, PEA 2.60, GPA 2.60 (Sem or Cum), and C2C or C3C in good standing. Sem hrs: 0 fall and 3 spring.

Armnshp 496. Parachuting Instructor. 0(2). Selected cadets who wish to serve as instructors and jumpmasters for Armnshp 490 and upgrade courses. Cadets participate in competitive parachuting events and parachute demonstrations throughout the United States. (Cadets performing Parachuting Instructor Duty are not eligible to train as instructors in any other Academy Aviation or Airmanship courses.) Completion during summer fulfills a military training leadership requirement. Pass/fail. Prereq: Armnshp 491 and 98 FTS approval, not on any probation, AOC and academic advisor approval, minimum entry MPA/PEA/GPA 2.6 (Cum or Sem), and C1C or C2C in good standing. Sem hrs: 0 summer, fall, or spring.

AREA STUDIES (Area Stu)

Offered by various departments within the Humanities and Social Sciences Divisions.

Area Studies 495. Special Topics in Area Studies. 3(1). Interdisciplinary Course. This course is intended to serve as a capstone for those specializing in the study of a particular region of the world (the suffix indicating region of specialization: "A" for Asia, "E" for Europe, "F" for Africa, "L" for Latin America, "M" for Middle East, "N" for North America, "S" for the former Soviet Union and Eastern Europe and "W" for Western Europe). Cultural, literary, historical, political, social, economic, geographic, and other pertinent factors bearing on an understanding of the particular region involved are treated by specialists from relevant departments. Portions of the course may be taught in the relevant language. Paper or final. Normally taken during the first-class year. Sem hrs: 3 fall or spring.

ASTRONAUTICS (Astro Engr)

Offered by the Department of Astronautics (DFAS)

Astro Engr 201. Technology Skills for Astronautics. 1(1). A self-paced course designed to provide the programming, modeling, and simulation skills required in the various courses in the Astro Engr major. Students will be introduced to the MatLab/Simulink tools for programming, modeling, and simulation and to state-of-the-art 3-D computer tools for satellite analysis and visualization. A series of proficiency tasks using the various tools must be completed over the course of the semester. Prereq: Comp Sci 110. Coreq: Astro Engr 210. Sem hrs: 1 fall or spring. Pass/fail.

Astro Engr 210. Introduction to Astronautics. 3(1). Introduction to the history, principles, and challenges of space. Elements of space missions are examined including orbits, spacecraft systems, launch vehicles, re-entry, operations, and mission management. Emphasis is placed on understanding the underlying physical principles and the system engineering process used to

select orbits, plan maneuvers, and accomplish preliminary design of spacecraft payloads/subsystems to meet mission requirements. Concepts are reinforced through hands-on use of application-based analysis and visualization software and communication of these learned principles through written reports. This course is intended for cadets who have declared or are considering declaring the Astro Engr or Space Ops majors. Content of the course is identical to Astro Engr 410; however, additional emphasis is placed on mathematical background of the material in preparation for cadets interested in pursuing those majors. Final exam. Prereq: Math 142, Engr 101, Physics 110, and DFAS Department Head approval. Sem hrs: 3 fall or spring.

In addition, this course/program is a primary contributor to the development and assessment of the following USAFA outcomes:

Skills: Quantitative Literacy, Decision Making

Knowledge: Heritage and Application of Air, Space, and Cyberspace Power; Principles of Engineering and the Application of Technology

Astro Engr 321. Intermediate Astrodynamics. 3(1). An intermediate course in orbit mechanics. Topics include orbit determination and prediction, orbit maneuvers, perturbations, rendezvous and proximity operations. Emphasis is on the design and use of structured computer programs to solve real-world astrodynamics problems. Programming experience is recommended. Final exam. Prereq: Astro Engr 201 or Comp Sci 211; Astro Engr 210 or Astro Engr 410; completed or enrolled in Engr Mech 320 or Physics 355. Sem hrs: 3 fall or spring.

Astro Engr 331. Space Systems Engineering. 3(2). Fundamentals of space vehicle design are presented with an emphasis on systems engineering. Introduction to system-level spacecraft design issues are covered including reliability, environments, radiation effects, testing, materials engineering, integration, launch vehicles, and operations. Introduction to and analyses of payloads, structures, propulsion, electrical power, communications and data handling, attitude determination and control, and thermal control subsystems are also covered. The course includes an integrated lab experience where small teams analyze and integrate subsystems into a functioning small satellite called "EyeasSat." Each team demonstrates and documents their EyeasSat at the system level as a part of the final evaluation. Final report or final exam. Prereq: Astro Engr 210; Chem 110 or Chem 200; and Physics 215 (or DFAS department head approval.) Sem hrs: 3 fall or spring.

Astro Engr 351. Rocket Propulsion. 3(1). Introduction to rocket propulsion and propulsion system design. The basic laws of thermodynamics, thermochemistry, and conservation are used to determine ideal motor performance. Emphasis is placed on describing the components and conceptual design criteria for liquid, solid, and hybrid rockets. Electric, nuclear, and other advanced propulsions systems are also studied. Final exam or final project. Prereq: Astro Engr 210 and Aero Engr 241. Sem hrs: 3 fall or spring.

Astro Engr 410. Introduction to Astronautics. 3(1). Introduction to the history, principles, and challenges of space. Elements of space missions are examined including orbits, spacecraft systems, launch vehicles, re-entry, operations, and mission management. Emphasis is placed on understanding the underlying physical principles and the system engineering process used to select orbits, plan maneuvers, and accomplish preliminary design of spacecraft payloads/subsystems to meet mission requirements. Concepts are reinforced through hands-on

use of application-based analysis and visualization software and communication of these learned principles through written reports. Final exam. Prereq: Math 142, Engr 100/101, and Physics 110. Sem hrs: 3 fall or spring.

In addition, this course/program is a primary contributor to the development and assessment of the following USAFA outcomes:

Skills: Quantitative Literacy, Decision Making

Knowledge: Heritage and Application of Air, Space, and Cyberspace Power; Principles of Engineering and the Application of Technology

Astro Engr 422. Advanced Astrodynamics. 3(1). A continuation of Astro Engr 321. The course focuses on applying numerical and analytical techniques to solve realistic Air Force problems in astrodynamics and space operations. Perturbations and the associated effects on satellite orbits are examined. Least Squares and Kalman filter estimation techniques are applied to the orbital prediction problem using batch and sequential processing. Structured computer programming is used extensively in problem solutions. Final exam. Prereq: Astro Engr 321. Sem hrs: 3 spring.

Astro Engr 423. Space Mission Design. 3(1). Basic mission design principles for Air Force and civilian launch systems are examined. Mission objectives and constraints; feasibility studies; time-line generation; launch, on-orbit, and recovery operations; and contingency planning are studied. Structured computer programming is applied to analyze typical space missions. Final project. Prereq: Astro Engr 321. Sem hrs: 3 fall.

Astro Engr 436. Small Spacecraft Engineering I. 4(2). An introduction to small spacecraft systems engineering. Multi-disciplinary system design of spacecraft hardware and software to include subsystems, propulsion systems, attitude determination and control systems, electrical power systems, structures, payloads, and ground stations. Define mission and system requirements, perform engineering trade studies, design and analyze spacecraft systems, and build and test flight hardware. Course also includes opportunities to operate on-orbit small satellites. Final project or report. Prereq: C1C standing and departmental approval. Sem hrs: 4 fall.

Astro Engr 437. Small Spacecraft Engineering II. 4(2). A second course in small spacecraft systems engineering. Multi-disciplinary system design of spacecraft hardware and software to include subsystems, propulsion systems, attitude determination and control systems, electrical power systems, structures, payloads, and ground stations. Finalize design, fabricate, test, and fly actual spacecraft on space boosters. Course also includes opportunities to operate on-orbit small satellites. Final project or report. Prereq: C1C standing, Astro Engr 436, and departmental approval. Sem hrs: 4 spring.

Astro Engr 445. Spacecraft Attitude Dynamics and Control. 3(1). Fundamental introduction to the problem of controlling satellite attitude. Topics include direction cosine and Euler angle attitude parameters, torque-free rigid body motion, flexible body effects and energy dissipation, spin stabilization, gravity-gradient stabilization, momentum and reaction wheel control, and reaction jet control. Projects include the development of a satellite attitude dynamics simulation and the design of a reaction wheel and reaction jet attitude control system. Final project or final

exam. Prereq: Engr Mech 320 or Physics 355; completed or enrolled in Engr 342. Includes analysis and synthesis with MATLAB™ simulation. Sem hrs: 3 fall or spring.

Astro Engr 495. Special Topics. 1-3(1). Selected topics in astronautics. Final exam or final report. Prereq: Department approval. Sem hrs and offering time determined by department (not more than 3 sem hrs).

Astro Engr 499. Independent Study. 3(0). Individual study and research supervised by a faculty member. Topic established with the department head. Final report. Prereq: Department approval. Sem hrs: 3 fall or spring.

- Astro Engr 499A. Independent Study. 2(0). Sem hrs: 2 fall or spring.
- Astro Engr 499B. Independent Study. 1.5(0). Sem hrs: 1.5 fall or spring.
- Astro Engr 499C. Independent Study. 1(0). Sem hrs: 1 fall or spring.

Astro Engr 543. Methods of Optimization for Engineers. 3(1). Course in optimization methods taught at graduate level. Topics include parameter optimization, optimization for dynamic systems, optimal control and numerical solutions. Final exam. Prereq: Math 346, Math 356 and Engr 342 or either ECE 333 or Mech Engr 325 with Course Director approval. Computer projects require programming proficiency. Sem hrs: 3 spring.

BASIC SCIENCES (Bas Sci)

Offered by the Basic Sciences Division

Bas Sci 401. Basis Sciences Divisional Core Substitute. 3(0). This course can only be awarded for coursework accomplished during a semester of study abroad (CSSAP), international exchange (CSEAP), or service academy exchange (SAEP). With applicable Department Head or Division Chair approval, this course can fulfill the core requirement for Biology 315 or Math 300/356/378. Sem hrs: 3 fall or spring.

BEHAVIORAL SCIENCES (Beh Sci)

Offered by the Department of Behavioral Sciences and Leadership (DFBL)

Beh Sci 110. Introduction to Behavioral Sciences. 3(1). This course provides an introduction to the scientific study of behavior and mental processes across diverse levels of analyses. This course covers psychological principles that can be applied in and out of the military. Critical thinking, leadership, and respect for human dignity will be emphasized through the study of subjects such as perception, cognition, learning, memory, social interactions, mental health issues, and the biological basis of behavior. In addition, students will be exposed to subjects closely related to psychology such as sociology, cultural anthropology, leadership, and human factors engineering. Final exam. Prereq: None. Sem hrs: 3 spring or fall.

In addition, this course/program is a primary contributor to the development and assessment of the following USAFA outcomes:

Responsibilities: Respect for Human Dignity
Skills: Critical Thinking
Knowledge: Principles of Science and the Scientific Method

Beh Sci 231. Basic Research Methods and Statistical Tools. 3(1). This course is the first in a two-course sequence that includes Beh Sci 332. Within this sequence, students are introduced to and then apply an integrated approach to empirical research, statistics, and ethics through study of the scientific method, hypothesis testing, and research design. Students will study and compute probability and descriptive statistics for normal and non-normal distributions on differing levels of measurement. Students will use statistical software to perform descriptive and inferential statistical analyses including, but not limited to, measures of central tendency and variability, normality, ANOVA, t-tests, Chi-square, correlation, and the principles of regression; with an emphasis on knowing when to use each method. Students will apply methodological and statistical knowledge in a behavioral science research study they design; culminating in an APA formatted research report (e.g. papers and/or posters). Final exam and/or final project or paper. Prereq: Beh Sci 110. Sem hrs: 3 spring.

Beh Sci 310. Foundations for Leadership and Character Development. 3(1). This course explores leadership development through both academic study and applied exercises. Specifically, the course examines individual leader development principles that will set students on a lifelong path of becoming a leader of character who treats others with respect and dignity. The academic study of leadership development will be combined with experiential exercises, case studies, and student projects designed to help students develop in their own leadership capacity. Final exam and/or final project or final paper. Prereq: Beh Sci 110. Sem hrs: 3 fall or spring.

In addition, this course/program is a primary contributor to the development and assessment of the following USAFA outcomes:

Responsibilities: Respect for Human Dignity, Lifelong Development and Contributions

Beh Sci 330. Abnormal Psychology. 3(1). This course examines the development, nature, and treatment of psychological disorders within a biopsychosocial context. Special consideration is given toward leadership and military applications. Final exam or final project. Prereq: Beh Sci 110. Sem hrs: 3 fall.

Beh Sci 332. Advanced Research Methods and Statistical Tools. 3(1). Continuation of Beh Sci 231 (please see Beh Sci 231 course description.) Final exam and/or final project or paper. Prereq: Math 142/152, Beh Sci 110 and Beh Sci 231, or departmental approval. Sem hrs: 3 fall.

Beh Sci 335. Learning and Memory. 3(2). How does experience affect performance? This is the central question that has confronted learning theorists for several millennia; it is a question which dominated psychology for most of its first century. This course will examine learning and memory from a variety of historical theoretical perspectives. Cadets will test learning and memory notions in the laboratory using rats and report their experimental findings. Lab. Final exam or final project. Prereq: Beh Sci 110. Sem hrs. 3 fall or spring.

Beh Sci 352. Social Psychology. 3(1). This course provides an introduction to social psychology and Behavioral Sciences. Social psychologists seek to understand the nature and causes of individual behavior in social situations. In other words, social psychology explains

how the average person reacts to various social pressures. Topics covered include social perception, attitudes, prejudice and discrimination, interpersonal attraction, social influence, prosocial behavior, aggression, groups and personality. From a practical standpoint, this course explains how and why people react to the world and other people as they do. Leadership implications are discussed. Final exam or final project. Prereq: Beh Sci 110. Sem hrs: 3 spring.

Beh Sci 355. Biopsychology. 3(1). Examines the biological and neurophysiological foundations of human and animal behavior. Emphasis is on central nervous system mechanisms which mediate processes such as learning and memory, language, intelligence, sleep and arousal, reward and punishment, and human mental disorders. Special consideration is given to sensation and perception and topics which impact human factors design concerns. Final exam or final project. Prereq: Beh Sci 110. Sem hrs: 3 fall.

Beh Sci 358. Military and Society. 3(1). Introduces sociology's foundational perspectives and focuses on a subfield in sociology known as military sociology. As such, it applies theoretical thinking and empirical findings from the social sciences to the military, both as a bureaucracy and as a profession. Issues addressed include how militaries are put together, how individuals fit into them, how militaries are related to the societies and cultures in which they are located, and the extent to which these processes are the same or different in all societies. While the primary emphasis is upon the American military, it considers other armed forces and their respective societies. Final exam or final project. Prereq: Beh Sci 110. Sem hrs: 3 fall.

Beh Sci 360. Sociology. 3(1). Introduces sociology's foundational perspectives and methodologies and applies them to the systematic study of human behavior in social contexts. Basic topics include the "sociological imagination," biology and social behavior, the origins and components of culture, socialization, the structure of social interaction, and the creation and maintenance of groups, organizations, and societies. Additional themes include social stratification, race/ethnicity, gender and sexuality, globalization and development, marriage and family, religion, and social change. Final exam or final project. Prereq: None. Sem hrs: 3 spring.

Beh Sci 362. Class, Race, and Gender. 3(1). Builds on foundational sociological perspectives and methodologies to define and analyze dimensions of social stratification. The course examines the central elements of class stratification – wealth, power, and prestige – considers theories related to dominant-subordinate group relations, provides a treatment of current social conditions of racial/ethnic groups in the U.S., and analyzes the contruction and reinforcement of gender and sexuality within major institutions in American society. Final exam or final project. Prereq: Beh Sci 358, Beh Sci 360, or department approval. Sem hrs: 3 fall.

Beh Sci 370. Cognitive Psychology. 3(1). This course familiarizes students with the cognitive approach to understanding human behavior which argues that human behavior can best be understood and predicted through a scientific understanding of mental activity. Topics include: perception, attention, memory, decision making, consciousness, and other processes related to thinking. Final exam or final project. Prereq: Beh Sci 110. Sem hrs: 3 fall.

Beh Sci 373. Introduction to Human Factors Engineering. 3(1). This course examines the process, principles, and guidelines of human factors engineering as they impact the design of systems used by people and provides an introduction to human factors engineering and Systems Design. Emphasizes the interaction between human capabilities and limitations, to the task, and the environment, as they relate to system performance. Final exam or final project. Prereq: Beh Sci 110. Sem hrs: 3 fall or spring.

Beh Sci 375. Human Factors in Aviation Systems Engineering. 3(1). This course examines human performance and human-machine design issues in military and civilian aviation systems. Students learn about human factors engineering in aviation systems and their failures as well as reviewing the nature and scope of human factors impacts on performance by air and ground crews and their supervisors. Students review the body of knowledge demonstrating how human flight-related performance is based on psychological and physiological capabilities and limitations that, in turn, influence the ability of humans to interact within the systems design constraints. Students also learn how the application of effective systems design, specialized automation, and ongoing training can facilitate optimal human-system performance associated with flight. Final exam or final project. Prereq: None. Sem hrs: 3 fall.

Beh Sci 380. Theories of Personality. 3(1). Examines major psychological theories of personality, including analytic, humanistic, cognitive, and learning approaches. Other non-traditional approaches are also considered which explain personality development from the socio-cultural perspective. Theoretical concepts are examined to understand individual personality development, relevant current and historical issues, and applications to military leadership. Final exam or final project. Prereq: Beh Sci 110. Sem hrs: 3 fall.

Beh Sci 390. Sensation and Perception. 3(1). This course will provide an introduction to the way the outside world is perceived through our senses and how our brain makes sense of all the sensory inputs. How our body experiences the world and what we perceive of the world are two interrelated, but different entities. This is an important topic for Air Force officers, because our perceptions do not always accurately represent the outside world. For example, pilots with inaccurate perceptions of their aircraft attitude (e.g., spatial disorientation) could lead to loss of control of their aircraft. Through lectures, labs, demonstrations and discussions, this course will introduce the basic anatomy of the sensory systems, as well as, how these structures are used to "make sense" out of what we are experiencing so that we can do such things as understand speech, perceive color, see motion and depth, and recognize faces. Final exam or final project. Prereq: Beh Sci 110. Sem hrs: 3 spring.

Beh Sci 411. Contemporary Leadership Theory and Practice. 3(1). This course explores the current trends and theories in leadership and leadership development from a scientific perspective, centering on the substantiated and promising concepts of transformational leadership, values-based leadership, servant leadership, and emotional intelligence, among others. Case studies/current events, facilitated and student-led round-table discussion projects, and experiential exercises will allow the student to gain an in-depth understanding of leadership and its application across a variety of situations and contexts. Final exam and/or final project or final paper. Prereq: Beh Sci 310. Sem hrs: 3 spring.

Beh Sci 412. Leading and Measuring Organizational and Personal Change. 3(1). The purpose of this course is to enhance understanding of the tools, process, and challenges of effective change. Students will learn basic assessment procedures and their application to leading organizational and personal change. Course content will focus on change theory, processes and models including the role of change agents, personal and organizational diagnosis and intervention, problems and issues in organizational change, and job analysis and performance. Final exam, final project, or final paper. Prereq: Beh Sci 310. Sem hrs: 3 fall.

Beh Sci 440. Lifespan Development. 3(1). This course examines how people develop physically, psychologically, socially, and cognitively from birth to death. It explores changes that are universal and changes that are unique to specific individuals. Developmental theories explaining these changes are presented. The course also focuses on the social context of development: "What is the impact of income, education, ethnicity, race, sex, culture, and historical time period on developmental outcomes?" Final exam or final project. Prereq: Beh Sci 110. Sem hrs: 3 spring.

Beh Sci 450. Advanced Topics in Leadership. 3(1). An advanced course designed to explore critical topics in leadership on a rotational basis to create a deeper and more robust understanding of the specific discipline. Particular course content and emphasis varies from year to year based on new and emerging research in the selected field of study. This course is designed primarily for the advanced student and will be conducted through a seminar/discussion model. A cadet can only take this course once. Final exam and/or final project or final paper. Prereq: Beh Sci 411, Beh Sci 412, or department approval. Sem hrs: 3 spring.

Beh Sci 471. Engineering Psychology. 3(1). This advanced course examines cognitive and human performance theories and their applications to human-machine integration in systems design. Special attention is given to the way humans perceive, understand, and respond to information. Application of course content will include the development of an experimental setting to test an applied research question. Final exam or final project. Prereq: Beh Sci 373. Sem hrs: 3 fall.

Beh Sci 473. Human Factors Engineering in Systems Design. 3(2). This capstone course emphasizes the role and responsibilities of the human factors engineer in the design and evaluation of systems. The course uses a combination of group, individual, and in-class design projects to explore the system design process. Particular attention is given to human characteristics and their effects on system performance. Final exam or final project. Prereq: Beh Sci 471. Sem hrs: 3 spring.

Beh Sci 495. Special Topics. 1-3(1). Selected topics in the Behavioral Sciences. Final exam or final paper. Prereq: Department approval. Sem hrs and offering time determined by DFBL (not more than 3 sem hrs).

Beh Sci 498. Senior Capstone. 3(1). An intensive seminar integrating foundational writings and modern theories across behavioral science disciplines to frame, assess, and develop recommendations related to current military issues. Cadet will participate in seminar discussions and team project management. Guest speakers, case studies, and/or field work will create

additional opportunities to apply prior course work to current military issues. Final project and/or oral presentation. Prereq: First Class Cadet and Behavioral Sciences major or department head approval. Sem hrs: 3 spring.

Beh Sci 499. Independent Study. 3(0). Research or practicum in a specific area of behavioral science. Conducted on a tutorial basis. Final paper. Prereq: Department approval. Sem hrs: 3 fall or spring.

- Beh Sci 499A. Independent Study. 2(0). Sem hrs: 2 fall or spring.
- Beh Sci 499B. Independent Study. 1.5(0). Sem hrs: 1.5 fall or spring.
- Beh Sci 499C. Independent Study. 1(0). Sem hrs: 1 fall or spring

BIOLOGY (Biology)
Offered by the Department of Biology (DFB)

Biology 210. Paradigms in Biology with Laboratory. 3(2). This course establishes a foundation for further study in the biological sciences. It is required for Biology majors, and recommended for those pursuing advanced courses in biology (e.g., cadets pursuing careers in the Medical, Dental, Nursing, and Biomedical Sciences Corps). Biology 210 serves as a core substitute for Biology 315. The course presents the concepts essential for understanding modern biology. Course content includes: cell biology, metabolism, genetics, biotechnology, and evolution. Discussions address application and limitations of the scientific method, ethical issues of modern biology, and the influence of biological science on society. Laboratories reinforce concepts, promote critical thinking, and introduce essential laboratory skills. Final exam. Prereq: Chem 100 or Chem 110. Sem hrs: 3 fall or spring.

In addition, this course/program is a primary contributor to the development and assessment of the following USAFA outcomes:

Skills: Critical Thinking
Knowledge: Principles of Science and the Scientific Method

Biology 315. Introductory Biology with Laboratory. 3(2). This course provides an overview of biological systems, their structure and function, covering concepts essential to understanding key issues in biology today. Cadets learn how biological systems are organized and operate throughout the biological hierarchy. Decision-making based on an understanding of biological systems is applied to Air Force operations, and to the health and fitness of the Air Force officer. Concepts are reinforced through critical thinking exercises, hands-on activities, and laboratory experiences. Final exam. Prereq: Chem 110 or Chem 200. Sem hrs: 3 fall or spring.

In addition, this course/program is a primary contributor to the development and assessment of the following USAFA outcomes:

Skills: Critical Thinking
Knowledge: Principles of Science and the Scientific Method

Biology 320. Biomechanics. 3(1). A study of the physical, anatomical, mechanical, and physiological basis for motion focused on the human. Joint and muscle physiology will be explored as a basis for functional activities. Physics and mechanical engineering concepts will be applied to describe, investigate, and compare the ways we initiate and control movement. Students also learn the effects musculoskeletal injury may have on normal motion. Final exam

and/or final project. Prereq: Biology 210 or Biology 315; Engr Mech 220. Sem hrs: 3 spring.

Biology 330. Zoology. 3(2). An integrated study of the principles of invertebrate and vertebrate zoology presented with a phylogenetic approach. Examines the behavior, ecology, morphology, physiology, reproductive biology, classification, and evolutionary relationships of animals. Functional aspects of respiration, circulation, osmoregulation, excretion, metabolism, and thermoregulation are highlighted through comparisons within and among animal groups. Through laboratory exercises, students will learn and recognize structural, physiological, and evolutionary features of selected animals. Final exam. Prereq: Biology 210. Sem hrs: 3 fall or spring.

Biology 331. Botany. 3(2). An integrated study of the biology of plants is presented from molecular to community levels of organization. Course content is organized into five units of study: the plant system, plant anatomy and morphology, plant physiological ecology, plant reproductive biology, and plant evolution and classification. Although this course focuses primarily on seed plants, other organisms such as fungi, algae, and lichens are explored. The study of plants is important because of their relevance to nutrition, drugs, celebration, and objects from daily life such as paper products, clothing, furniture, and flowers. A botanical perspective enriches an understanding of the natural world. Laboratory and fieldwork is required. Final exam. Prereq: Biology 210 or Biology 315. Sem hrs: 3 fall or spring.

Biology 332. Microbial Diversity. 3(1). Microscopic organisms are intimately involved in our daily lives, where they produce many familiar foods and medicines, impact health, and play important roles in natural and engineered systems. This course will survey microbial groups that include algae, bacteria, fungi, protozoa, viruses, viroids, prions, and selected invertebrates. Each group will be considered in terms of structure, classification, biochemistry, ecology, and economic and medical significance. Relevance to the Air Force mission, such as deployment health issues and biowarfare defense, is reinforced throughout the course. Includes integrated labs and demonstrations. Final exam or final project. Prereq: Biology 210 or Biology 315. Sem hrs: 3 fall or spring.

Biology 345. Aerospace Physiology. 3(1). This course provides in-depth knowledge as to how human performance relates to the warrior and aircrew member. Specifically, it includes a survey of the physiological stresses associated with the aerospace environment. Topics include: effects of pressure changes with altitude, hyperbaric environments, respiratory and circulatory physiology, hypoxia and hyperventilation, pressurization and aircraft decompression, effects of "G" forces, self-imposed stresses, thermal stresses, human factors, crash dynamics and escape systems, sensory physiology, spatial disorientation, and space physiology. Suitable for cadets majoring in any academic discipline, including divisional majors or other programs. Optional field trip. Final exam. Prereq: Biology 210 or Biology 315. Sem hrs: 3 fall.

Biology 360. Cell and Molecular Biology. 3(1). This course provides a comprehensive examination of the cell, the fundamental unit of life. Emphasis on eukaryotic cells, cellular organization and processes, and how cell structure and activity ultimately determine structures and functions at the organismal level. Lesson topics include, but are not limited to, major cell structures, energy transforming cellular processes, application of cell biology to human disease,

the cell cycle, and biotechnology. Fundamental cellular concepts will be illustrated and reinforced through discussions of factual information applied to case studies and critical thinking exercises. The course reinforces current principles of cell biology and facilitates learning of the scientific method. Final exam. Prereq: Biology 210 or Biology 315; Chem 230 or Chem 233 or concurrent enrollment. Sem hrs: 3 fall or spring.

Biology 363. Genetics. 3(2). This introductory course in classical and contemporary genetics explores a variety of topics, processes, and issues, including simple (Mendelian) and complex inheritance patterns, genetic mapping, sex determination, population/evolutionary genetics, DNA/RNA biochemistry/function, genome structure, DNA replication, gene expression, mutations, genetic/chromosomal disorders, forensics, and genetic engineering. Throughout the course, the ethical and social issues that emerge from modern genetics are discussed, and the relevance of the lesson material in personal, clinical, and military contexts is emphasized. Laboratory and practical exercises complement the course content and provide hands-on experience with classical and modern techniques used in genetic research and biotechnology. A group laboratory project reinforces course concepts, provides experience with live organisms, and develops skills in problem solving, critical thinking, scientific writing, and effective teamwork. Final exam. Prereq: Biology 210 or Biology 315; Chem 230 or Chem 233 or concurrent enrollment. Sem hrs: 3 fall or spring.

Biology 370. Human Nutrition. 3(1). Provide a comprehensive, thoroughly updated account of nutrition principles and their application. This course furnishes students with accurate nutrition information and teaches them how to use a critical-thinking approach in making important daily decisions about their own diet. Course material will focus on the fundamentals of nutrition such as defining the roles of carbohydrates, fats, proteins, vitamins, and minerals in metabolism; examining eating practices through individual dietary analysis, exploring the importance of nutrition in the prevention of disease; and discussing the interplay of diet options with various body systems for athletic performance, daily fitness, and overall health. Final exam. Prereq: Biology 210 or Biology 315. Sem hrs: 3 fall.

Biology 380. Principles of Ecology. 3(1). Fundamental interrelationships between organisms and their environments, emphasizing energy flow through ecosystems, biogeochemical cycling, population dynamics, and community interactions. Emphasis is placed on how human activities affect the quality of life and the natural world. Case studies include the impact of environmental concerns on regional and global Air Force operations. Final exam. Prereq: Biology 210 or Biology 315. Sem hrs: 3 fall or spring.

Biology 410. Anatomy and Physiology: Sensory and Motor Integration. 3(2). An introduction to human sensory and locomotory systems via experimentation and dissection of the human cadaver, with dissection emphasized. The course focuses on feedback mechanisms and the integration of organ systems for voluntary control. Final exam or final project. Prereq: Biology 210 or Biology 315. Sem hrs: 3 fall.

Biology 430. Vertebrate Zoology. 3(2). A study of evolutionary origins, adaptations, characteristics, natural history, and classification of five major vertebrate groups: Fishes, Reptiles, Amphibians, Mammals, and Birds. Final exam or final project. Prereq: Biology 330.

Sem hrs: 3 fall of odd-numbered years.

Biology 431. Microbiology. 3(2). A study of classical microbiology to include: environmental, industrial, and medical applications. Laboratory studies complement lectures. Systematics and classification of bacteria and viruses; the structure, function, and metabolic pathways of groups of bacteria. Microbial ecology of humans; disease processes and defense. Microbiology of waste disposal, waste treatment, environmental microbiology, and industrial microbiology, biowarfare, and bioterrorism. Final exam. Prereq: Biology 332, Chem 230 or Chem 233. Sem hrs: 3 spring.

Biology 440. Anatomy and Physiology: Visceral Systems Integration. 3(2). An introduction to systems physiology via experimentation and dissection of the human cadaver, with experimentation emphasized. The course focuses on neural and endocrine feedback mechanisms for involuntary control and maintenance of homeostasis. Final exam or final project. Prereq: Biology 210 or Biology 315. Sem hrs: 3 spring.

Biology 459. Principles of Evolution. 3(1). This course will examine the principles, patterns, mechanisms, and processes of biological evolution. The course format will comprise traditional lectures, student-led discussions, guest speakers, practical exercises, video programs, and selected readings. This course will draw on examples from botany, zoology, human anatomy, cell and molecular biology, ecology, and genetics to provide a fuller understanding of evolution in terms of evidence, processes, and outcomes. Through the study of evolutionary biology, students will gain an appreciation of evolution as a unifying theme in biology, and will acquire a more complete understanding of the origins, diversity, interrelationships, geographical distributions, and adaptations of living organisms. Final exam. Prereq: Biology 363. Sem hrs: 3 spring of odd-numbered years.

Biology 464. Molecular Biology Methods. 3(2). A practical study of the methods and techniques used in the modern molecular biology and genetic engineering laboratory. Instructor-assisted laboratory exercises with complementary lectures will focus on bacterial genetics, preparation and analysis of nucleic acids, recombinant DNA construction, bacterial transformation, analysis of cloned gene products, chromatographic separation of biomolecules. and polymerase chain reaction applications. Selected methods used in cancer, immunology, and animal development research will be included. Final exam or final project. Prereq: Biology 363, Chem 230 or 333. Sem hrs: 3 fall.

Biology 480. Biology Capstone Seminar. 3(1). The Biology Capstone Seminar emphasizes student participation in exploring a variety of current biological issues. Students are challenged to develop a deep, reflective understanding of a wide range of biological concepts as they evaluate evidence, analyze issues, clarify assumptions, and consider different perspectives. They communicate clear logical, scientific thinking through reading, listening, speaking, and writing. Final paper. Prereq: C1C standing. Sem hrs: 3 spring or fall.

Biology 481. Applied Ecology. 3(2). Lecture and laboratories that address ecology and field biology. Lecture includes biotic and abiotic inputs and controls of various ecosystems. Laboratory exercises introduce survey techniques used in field studies. Classroom and

laboratory work emphasizes environmental issues that are of special interest to Air Force personnel. Includes field studies conducted on the Academy grounds. Field trip. Final exam and/or final project. Prereq: Biology 380 or concurrent enrollment with department approval. Sem hrs: 3 fall.

Biology 495. Special Topics. 1-3(1). Selected topics in the biological sciences. Final exam or final report. Prereq: Announced each semester. Sem hrs and offering times determined by the department (not more than 3 sem hrs).

Biology 499. Independent Study. 3(0). Individual research or tutorial study in the biological sciences under the direction of a faculty member. Emphasis is on using pertinent biological literature and conducting field and laboratory research. Prereq: Department approval. Sem hrs: 3 fall or spring.

- Biology 499A. Independent Study. 2(0). Sem hrs: 2 fall or spring.
- Biology 499B. Independent Study. 1.5(0). Sem hrs: 1.5 fall or spring.
- Biology 499C. Independent Study. 1(0). Sem hrs: 1 fall or spring.

CENTER FOR CHARACTER DEVELOPMENT (CWC)

Offered by the Center for Character Development (CWC)

Character & Leadership 101. Foundations of Honorable Living. 0(0). This course is a purposeful developmental experience for fourth-class cadets, not to exceed seven and a half hours, designed to focus cadets towards a strong internal commitment to personal values/virtues and ownership of their personal character & leadership development. This course is tied to the Personal level of the ODS PITO model (Personal, Interpersonal, Team, Organizational). "Foundations for Honorable Living" is a graduation requirement scheduled during the fourth-class fall or spring. Cadets can meet the requirements for this course of instruction by choosing one of two instructional methodologies:

- VECTOR Seminar. (Vital Effective Character through Observation and Reflection). VECTOR is an energetic one-day seminar/workshop, not to exceed seven and an half hours, that exposes cadets to various leadership and followership concepts. Course materials are presented in the form of experiential learning activities and discussions with active duty and/or retired officers and senior NCOs. VECTOR allows cadets to explore and commit to their own personal develompent around ethical values/virtues. Pass/Fail. Prereq: None. Sem hrs: 0 fall or spring.
- MOSAIC Personalized coaching experience that allows cadets to explore and commit to their own personal development around ethical values/virtues. Cadets are paired with trained developmental coaches and required to meet with those coaches multiple times throughout a given semester. Coaching sessions will not conflict with other scheduled classes or military requirements. Total time required to meet course requirements will not exceed seven and a half hours. Pass/Fail. Prereq: None. Sem hrs: 0 fall or spring.
  In addition, this course/program is a primary contributor to the development and assessment of the following USAFA outcomes:

Responsibilities:	*Ethical Reasoning and Action, Respect for Human Dignity*
Skills:	*Courage*
Knowledge:	*Ethics and the Foundations of Character*

Character & Leadership 201. R&R. Respect and Responsibility. 0(0). This program is an energetic character and leadership development seminar/workshop, not to exceed seven and a half hours, designed to take cadets out of their normal environment while helping them discover valuable information about themselves, others, and reflect upon the interpersonal interactions that foster a healthy command environment. This workshop helps third-class cadets develop their interpersonal leadership skills through valuable experiential exercises. Respect and diversity are some of the prominent themes. Students attempt a series of activities involving physical risk, self-assessment and interpersonal leadership, which illustrate human relations and diversity issues. A goal of R&R is that participants recognize and acknowledge how differences and similarities impact interpersonal leadership behaviors. Additionally, participants learn to appreciate the impact of respect and to challenge views and biases that undermine a positive command environment. Parts of this program will use the Adventure-based Learning technology. This program is a graduation requirement scheduled during the third-class fall or spring. Pass/fail. Prereq: Character and Leadership 101. Sem hrs: 0 fall or spring.

In addition, this course/program is a primary contributor to the development and assessment of the following USAFA outcomes:

Responsibilities: Ethical Reasoning and Action, Respect for Human Dignity
Skills: Courage
Knowledge: Ethics and the Foundations of Character

Character & Leadership 301. Leaders in Flight Today. 0(0). This course is a purposeful developmental experience for second-class cadets, not to exceed seven and a half hours, designed to focus cadets toward developing high-performance teams with an emphasis on becoming "Servants to the Nation". This course is tied to the Team level of the ODS PITO model (Personal, Interpersonal, Team, and Organizational). LIFT is a graduation requirement scheduled during the second-class fall or spring. Cadets can meet the requirements for LIFT by completing one of two versions of this course.

- Seminar. This intensive seminar/workshop, not to exceed seven and a half hours, emphasizes development around the concepts of servant leadership, trust, loyalty, behavioral integrity, and moral courage. The seminar/workshop stresses character and leadership development using a variety of teaching tools and techniques, including experiential learning activities, case study analysis, and small group facilitation. Pass/fail. Prereq: Character and Leadership 201. Sem hrs: 0 fall or spring.
- Personalized coaching experience. This version of LIFT is primarily targeted at second-class cadets who serve in the role of "Element Leader". This version of the course consists of an initial half-day workshop experience that emphasizes development around the concepts of servant leadership, trust, loyalty, behavioral integrity, and moral courage. Cadet participants are then required to meet with their cadet squadron Academy Military Trainer (AMT) for individualized developmental coaching sessions 2-3 times throughout a given semester. These coaching sessions will not conflict with other scheduled academic classes. A culmination experience completes the course requirements. The total time required to meet course requirements will not exceed seven and a half hours. Pass/fail. Prereq: Character & Leadership 201. Sem hrs: 0 fall or spring.

  In addition, this course/program is a primary contributor to the development and assessment of the following USAFA outcomes:

Responsibilities: *Ethical Reasoning and Action, Respect for Human Dignity*
Skills: *Courage*
Knowledge: *Ethics and the Foundations of Character*

Character & Leadership 401: ACES. Academy Character Enrichment Seminar. 0(0). The ACES capstone seminar is a dynamic interactive workshop, not to exceed seven and a half hours, designed to focus attendees on the character and ethical demands placed on Air Force officers. It is tied to the Organizational level of the ODS PITO model (Personal, Interpersonal, Team, and Organizational). There is also an added focus on ensuring that cadets have a sound, fundamental process for evaluating and making moral and ethical decisions. Attendees are exposed to a myriad of discussions, issues, concepts, and experiences, all designed to convey the importance of character and leadership development in self and others, as well as the difference between being a "good" leader and being an "effective" leader. Participants engage in dialogue and discussions throughout the day with facilitators, guest lecturers, and their fellow cadets that highlight examples of significant, challenging ethical dilemmas they might encounter in their first-class year and in their military careers. Finally, there is an emphasis on the critical role that first-class cadets play in teaching and developing character traits in others, particularly their subordinate three classes (i.e., fourth-class, third-class, and second-class cadets). The end goal is to inspire and excite cadets about their future roles as officers and leaders. ACES is a graduation requirement scheduled during the first-class year. Pass/fail. Prereq: Character and Leadership 301. Sem hrs: 0 fall or spring.

In addition, this course/program is a primary contributor to the development and assessment of the following USAFA outcomes:
Responsibilities: *Ethical Reasoning and Action, Respect for Human Dignity*
Skills: *Courage*
Knowledge: *Ethics and the Foundations of Character*

Cadet Service Learning. Cadet Service Learning is a "Service Before Self" focused experience, designed to develop a sense of commitment, dedication, sacrifice, followership, and leadership in our cadets and the USAFA culture. The program targets community service activities, and helps cadets develop their leadership and organizational abilities while enhancing their sense of responsibility to others and giving of their free time to meet community needs. Cadet Service Learning continually seeks out service opportunities both in the local community and on a national scale as well; examples include: Habitat for Humanity and significant relief and service efforts like Hurricane Katrina. Cadet Service Learning is a catalyst for cadet development and growth in key leadership areas designed to create officers of character for the nation.

In addition, this course/program is a primary contributor to the development and assessment of the following USAFA outcomes:
Responsibilities: *Ethical Reasoning and Action, Respect for Human Dignity, Service to the Nation*
Knowledge: *Ethics and the Foundations of Character*

Core Values Education. Cadets first acquire an awareness of the foundational concepts of Air Force Core Values during Basic Cadet Training and thereafter continually expand their awareness and internalization of principles of integrity, service before self, and excellence in all we do throughout their four years at USAFA. The education plan is assembled with a view to

developing the highest standards of personal integrity and strength of character in each cadet in preparation for commissioning and to serve as a moral basis throughout his or her officer career. We want cadets to develop a strong internalization of the Air Force Core Values. The Core Values Education program is intended to complement the objectives for the other components of the USAFA character development programs. Our goal is for each cadet to fully understand, comprehend, and practice the Air Force Core Values throughout their life and career.

In addition, this course/program is a primary contributor to the development and assessment of the following USAFA outcomes:

Responsibilities: Ethical Reasoning and Action
Skills: Courage
Knowledge: Ethics and the Foundations of Character

Falcon Heritage Forum (FHF). A once-a-semester heritage event attended by 4,400 cadets, plus USAFA staff and faculty. This semi-annual symposium allows highly distinguished military veterans to interact with cadets through informal discussions and formal presentations. Typical guests include former Prisoners of War and combat veterans from WWII, Korea, Vietnam, and recent military operations in Afghanistan and Iraq. One veteran is assigned to each squadron for this 3½ day event.

In addition, this course/program is a primary contributor to the development and assessment of the following USAFA outcomes:

Responsibilities: Service to the Nation
Skills: Teamwork
Knowledge: Heritage and Application of Air, Space, and Cyberspace Power

Honor Education. Cadets first acquire an awareness of the foundational concepts of the honor system during Basic Cadet Training, and thereafter continually expand their awareness and internalization of principles of honor and character throughout their four years at USAFA. The education plan, comprising thirty-two hours of instruction, is assembled with a view to developing the highest standards of personal integrity and strength of character in each cadet, in preparation for commissioning and to serve as a moral basis throughout his or her officer career. The first class chose the words that comprise the Honor Code, leaving a legacy for all cadets that follow. We want cadets to develop a strong sense of honor, more than just not lying, stealing or cheating. We expect cadets to do their duty and live honorable. The honor education program is intended to complement the objectives for the other components of the USAFA character development programs. Our goal is for each cadet to fully grasp and internalize the honor code and the honor education objectives presented during Basic Cadet Training and each of their respective class years.

In addition, this course/program is a primary contributor to the development and assessment of the following USAFA outcomes:

Responsibilities: Ethical Reasoning and Action
Skills: Courage
Knowledge: Ethics and the Foundations of Character

National Character and Leadership Symposium (NCLS). Attended by 4,000 cadets and 300+ guests, students, and faculty from military academies and universities across the nation and around the world. This nationally-recognized forum ties together distinguished scholars, military

leaders, and corporate executives with a popular student consortium to explore character and leadership issues. Past keynote lectures have been given by the Chairman, Joint Chiefs of Staff, the Secretary of the Air Force, Olympic gold medalists, military personnel from all services, and sports role models – including Coach John Wooden of UCLA and Mr. Tommy Lasorda of the Los Angeles Dodgers. NCLS provides our cadets and permanent party the opportunity to enhance their understanding of character-based leadership.

In addition, this course/program is a primary contributor to the development and assessment of the following USAFA outcomes:

Responsibilities: *Ethical Reasoning and Action*
Skills: *Courage*
Knowledge: *Ethics and the Foundations of Character*

CHEMISTRY (**Chem**)
Offered by the Department of Chemistry (DFC)

Chem 100. Applications of Chemistry I. 3(2). Fundamental chemistry with emphasis on concepts underlying Air Force and other practical applications. Provides a foundation in inquiry-based learning to facilitate the development of critical thinking skills, data driven decision-making, and technical writing skills. Topics include atomic and molecular structure, electronic structure, oxidation-reduction reactions, stoichiometry, chemical bonding and structure, chemical analysis, environmental chemistry, and special topics. Laboratories emphasize both quantitative and qualitative analysis with computer interface for data collection and analysis. It is highly recommended that technical majors take this course in the 4° fall. This course must be taken in the 4° fall by any cadet interested in the medical career field or a science major to include Chemistry, Biochemistry, and Materials Chemistry to allow proper sequencing for Chem 110 in the 4° spring. Fall placement is also recommended for Biology majors. Final exam. Prereq: None. Sem hrs: 3 fall or spring.

In addition, this course/program is a primary contributor to the development and assessment of the following USAFA outcomes:

Skills: *Quantitative and Information Literacy, Critical Thinking, Decision Making*
Knowledge: *Principles of Science and the Scientific Method*

Chem 110. Applications of Chemistry II. 3(2). This course applies the principles of chemistry in the development of analysis, synthesis, and evaluation skills, as well as the scientific method in general. Chemical principles are integrated to develop comprehension of the capabilities and limitations of air power in the 21st century. Topics may include gas laws, thermodynamics, acids and bases, electrochemistry, kinetics, chemical equilibrium, biochemistry, and special topics. Chemical principles are taught within the framework of Air Force and other practical applications. Laboratories emphasize both quantitative and qualitative analyses with computer interface for data collection and analysis. This is the Chem 200 core substitute course for all cadets who enroll in this course. This course must be taken during the fourth-class year by the abovementioned cadets for major, accreditation, and medical school application timelines. Final exam. Prereq: Chem 100 or placement. Sem hrs: 3 fall or spring.

In addition, this course/program is a primary contributor to the development and assessment of the following USAFA outcomes:

Skills: *Quantitative and Information Literacy, Critical Thinking, Decision Making*
Knowledge: *Principles of Science and the Scientific Method*

Chem 200. Applications of Chemistry II. 3(2). A continuation of Chem 100. This course applies the principles of chemistry in the development of analysis, synthesis, evaluation skills, and the scientific method. Chemical principles are integrated to develop comprehension of the capabilities and limitations of air power in the 21st century. Topics may include gas laws, thermodynamics, acids and bases, electrochemistry, kinetics, chemical equilibrium, biochemistry, and special topics. Chemical principles are taught within the framework of Air Force and other practical applications. Laboratories emphasize both quantitative and qualitative analyses with computer interface for data collection and analysis. Final exam. Prereq: Chem 100. Sem hrs: 3 fall or spring.

In addition, this course/program is a primary contributor to the development and assessment of the following USAFA outcomes:
Skills: *Quantitative and Information Literacy, Critical Thinking, Decision Making*
Knowledge: *Principles of Science and the Scientific Method*

Chem 222. Analytical Chemistry. 3(2). Lecture and laboratory experience in both qualitative and quantitative analysis using both classical wet techniques and modern instrumentation. Topics may include proper use of laboratory equipment, preparing solutions, calculating experimental error, calibration methods, chemical equilibrium, titrations, spectroscopy, chromatography, mass spectrometry, and electrochemistry. This course emphasizes using the analytical process to solve real-world problems, making accurate and precise measurements, analyzing and interpreting data, and using and understanding modern instruments. Final exam. Prereq: Chem 110, Chem 200, or DFC approval. Sem hrs: 3 fall.

Chem 230. Introductory Organic Chemistry. 3(1). Introduction to the fundamentals of organic chemistry. Topics include: nomenclature of organic compounds; stereochemistry; reaction mechanisms; structure and function of organic functional groups; introduction to carbohydrates, lipids, amino acids and proteins, and nucleic acids; basic aspects of polymer chemistry. This is a service course primarily designed for Biology and Basic Sciences majors. Chemistry majors and those cadets desiring to apply for medical school will not take this course in lieu of Chem 233 and Chem 234. Final exam. Prereq: Chem 200 or equivalent; DFC approval required for enrollment in the spring semester. Sem hrs: 3 fall.

Chem 233. Organic Chemistry I. 3(1). The scientific study of the structure, properties, composition, reactions, and preparation of organic compounds. Topics include classification and naming of organic compounds, stereochemistry and conformational analysis, reaction and synthesis of alcohols, alkyl halides, alkenes, and alkynes; conjugated systems; spectroscopy and structure determination. Final exam. Prereq: Chem 200. Concurrent enrollment in Chem 243 is recommended but is optional for non-chemistry majors. Sem hrs: 3 fall.

Chem 234. Organic Chemistry II. 3(1). Continuation of Chem 233. Topics include mechanisms and reactions of aromatic compounds, organometallics, alcohols, ethers, and

carbonyl-containing functional groups to include enolate chemistry. Multi-step syntheses integrating the knowledge of multiple functional groups is emphasized. Other topics such as carbohydrates, polynuclear aromatics, heterocyclic compounds, amino acids, and proteins may be introduced. Final exam. Prereq: Chem 233; a grade of "C" or better in Chem 233 or Department Head approval. Sem hrs: 3 spring.

Chem 243. Organic Chemistry Laboratory. 3(2). Experiments in the preparation, purification and identification of representative organic compounds. The lab is designed to illustrate the principles discussed in Chem 233 and develop techniques needed for the isolation, purification, and characterization of organic materials. Sample preparation techniques include recrystallization, distillation, melting point determination, including sample preparation of IR, NMR, GC, and GC/MS, as well as instrument operation and data interpretation. Coreq: Chem 233. Sem hrs: 3 fall.

Chem 325. Space Chemistry. 3(1). This course examines the integral role chemistry plays in our efforts to effectively utilize space. Topics may include the chemical derivation of the elements found in the universe, materials science, propulsion chemistry, how the Air Force exploits the space environment to accomplish the mission, and other subjects of current interest. Final exam or final report. Prereq: Chem 200. Sem hrs: 3 fall.

Chem 335. Physical Chemistry I. 3(1) A lecture course which explores the fundamentals of chemical thermodynamics and equilibria involving gases, liquids, and solutions, the analysis of phase equilibria, electrochemistry, and chemical kinetics. Final exam. Prereq: Chem 200. Coreq: Math 243 (or Math 253). Sem hrs: 3 fall.

Chem 336. Physical Chemistry II. 3(1). An integrated lecture/laboratory continuation of Chem 335; includes the fundamentals of quantum chemistry, including computational applications, spectroscopy, statistical mechanics, properties of solids and liquids, transport properties, and surface chemistry. Final exam. Prereq: Chem 335 or DFC approval. Sem hrs: 3 spring.

Chem 344. Integrated Laboratory A. 3(2). An integrated laboratory course which covers a broad range of topics which will include organic synthesis, physical chemistry, and analytical techniques with instrumental methods. Instrumental techniques studied include applications of infrared, nuclear magnetic resonance spectroscopy, mass spectrometry, and various chromatographic analysis of materials. Prereq: Chem 233, 234, and Chem 335. Coreq: Chem 336. Sem hrs: 3 spring.

Chem 350. Chemistry of Weapons. 3(1). The primary focus of this course is on the chemistry associated with weapons, from construction to delivery to by-products and detection as a result of delivery or destruction. Topics covered include conventional explosives, propellants, chemical weapons, biochemical effects, munitions design, and current topics. Emphasis is on understanding the chemical principles and thermodynamic processes involved in a variety of current and future weapon systems. Final exam and/or final project. Prereq: Chem 200 or DFC approval. Sem hrs: 3 fall.

Chem 353. Theory of Instrumental Methods of Chemical Analysis. 3(1). Basic theory and real-world examples of modern analytical methods of chemical analysis. Topics include ultraviolet, visible, infrared absorption, Raman and emission spectroscopies; mass spectrometry, nuclear magnetic resonance and electron paramagnetic resonance spectroscopy; chromatography; thermal methods, and other methods as appropriate. Applied numeric methods will also be discussed, with an emphasis on error analysis and determination of signal-to-noise ratio. Focus is placed on theory of methods currently applied in advanced courses offered in the USAFA Department of Chemistry. Final exam. Prereq: Chem 200. Sem hrs: 3 spring or fall.

Chem 381. Chemistry of the Environment. 3(1). Discussion of the chemistry and alteration of the natural environment due to human impacts. Areas of study include atmospheric, soil, water, and industrial chemistry, environmental contaminant properties, hazardous materials, waste disposal, toxicology and environmental analytical techniques. Special topics of current or regional interest may be included. Emphasis is on understanding the chemical principles, phenomena, and basic chemistry associated with protecting and improving our environment. Final exam or final report. Prereq: Chem 200. Sem hrs: 3 spring.

Chem 399. Independent Study Techniques. 1.5(1). Methods and strategies for proposing, planning, and executing independent research. A very useful and strongly recommended lead-in to Chem 499. Knowledge and skills gained will facilitate the initiation of research projects and improve efficiency of the research process. Exercises in searching the chemical literature, reading journal articles, and preparation of proposals. With DFC approval, this course may be combined with Chem 499B for three semester hours of independent study credit. Final report/research proposal. Prereq: Chem 200 and DFC approval. Sem hrs: 1.5 fall or spring.

Chem 431. Theoretical Inorganic Chemistry. 3(1). Theoretical approach to atomic structure, covalent bonding, and molecular structures. Additional topics include a selection from the following options: acid-base chemistry, ionic compounds, a general survey of the periodic table, coordination chemistry, organometallics, catalysis, bio-inorganic chemistry, and inorganic synthesis. Final exam. Prereq: semester of quantum chemistry. Sem hrs: 3 fall.

Chem 432. Systematic Inorganic Chemistry. 3(1). Applications of Chem 431 with emphasis on a systematic study of the behavior of chemical elements and theoretical inorganic compounds. Lecture topics are selected from the chemistry of transition metals, organometallics, boron, bio-inorganic, fluxional molecules, kinetics, and mechanisms of inorganic reactions and special topics. Final exam or final project. Prereq: Chem 431 and DFC approval. Sem hrs: 3 spring.

Chem 433. Advanced Organic Chemistry. 3(1). Advanced studies of chemical bonding and molecular structure; molecular orbital theory, aromaticity, structure-reactivity relationships, kinetics, mechanisms, and linear free energy relationships. Topics include concerted reactions, conservation of orbital symmetry, frontier molecular orbitals, photochemistry, selected synthetic methods, nucleophilic carbon species, carbonyl compounds, principles of stereochemistry, and asymmetric synthesis. Final exam or final project. Prereq: Chem 234; Chem 335, and DFC approval. Sem hrs: 3 fall or spring.

Chem 434. Biochemistry. 3(1). Chemistry of the life processes. Topics covered include the

chemistry of biomolecules (carbohydrates, lipids, proteins, and nucleotides); energetics and metabolic control; enzymes; mechanisms and kinetics; intermediary metabolism; biosynthesis and function of macromolecules including DNA, RNA, and proteins; introduction to biotechnology and recombinant DNA techniques. This course may substitute for Chem 481 for Chemistry and Materials Chemistry majors. Final exam. Prereq: Chem 234 and Chem 335 or DFC approval. Sem hrs: 3 spring.

Chem 435. Advanced Physical Chemistry. 3(2). Development of molecular quantum mechanics and its application to molecular spectroscopy and chemical reaction dynamics. Topics include rotational, vibrational, and electronic spectroscopy; chemical reaction dynamics with emphasis on theoretical calculations for reactions, and advanced theoretical chemical methods. Laboratories provide hands-on experience in advanced physical chemistry concepts and characterization of the physical world. Final exam or final project. Prereq: Chem 336 and DFC approval. Sem hrs: 3 fall or spring.

Chem 440. Polymer Chemistry. 3(2). An introduction to polymer chemistry. Lecture topics include discussions on the interrelations between molecular and gross physical properties; polymer structure; methods of polymerization; polymer development; and Air Force applications for polymers. Laboratories provide hands-on experience in synthesis of polymeric materials. Final exam. Prereq: Chem 233, Chem 243, and Chem 335 or DFC approval. Sem hrs: 3 spring.

Chem 444. Integrated Laboratory B. 3(2). An integrated laboratory course which covers a broad range of topics which will include polymer chemistry, biochemistry, organic synthesis, physical chemistry, and analytical techniques with instrumental methods. Instrumental techniques studied include UV/vis, infrared, nuclear magnetic resonance spectroscopy, TGA/DTA, and various chromatographic analysis of materials. Prereq: Chem 233, Chem 234, Chem 335, and Chem 336. Sem hrs: 3 fall.

Chem 445. Advanced Laboratory Techniques. 3(2). This course is designed to enhance cadets' experience in advanced laboratory techniques in inorganic, organic, analytical, and physical chemistry. Experiments include preparation, purification, identification, and analysis of representative organometallic and inorganic compounds. Final project or final exam. Prereq: Chem 234 and Chem 336. Coreq: Chem 431 or DFC approval. Sem hrs: 3 spring.

Chem 465. Chemistry of Advanced Materials. 3(2). Chemical studies in modern and high-tech materials emphasizing physical chemistry fundamentals, the interface between molecules and materials, and the development of these materials. Topics include chemical computational models, materials for energy storage, electronics, structures, optics, and glasses. Laboratories provide hands-on experience in synthesis and characterization of materials. Final exam or final project. Prereq: Chem 336 or DFC approval. Sem hrs: 3 spring.

Chem 481. Biochemistry I. 3(1). Chemistry of living organisms emphasizing the roles played by biomacromolecules and macromolecular assemblies. Topics covered include an introduction to primary literature in biomedical research, cells and organelles, amino acids, nucleic acids, protein structures and enzymes, sugars and polysaccharides, lipids and membranes, and an

introduction to metabolism. Final exam. Prereq: Chem 234 and Chem 335 or DFC approval. Sem hrs: 3 fall.

Chem 482. Biochemistry II. 3(1). Chemistry of living organisms emphasizing the central metabolic processes and the transmission of genetic information. Topics covered include glycolysis and other pathways of carbohydrate metabolism, the citric acid cycle, lipid and amino acid metabolism, signal transduction, DNA replication, transcription of DNA and RNA, and translation of mRNA into protein. Final exam. Prereq: Chem 481. Sem hrs: 3 spring.

Chem 491. Biochemistry Laboratory. 3(2). Experiments to manipulate DNA, RNA, and proteins. Techniques covered include agarose and acrylamide gel electrophoresis, recombinant DNA techniques, microbial culture and transformation, cell culture, and production and purification of recombinant proteins. This lab is designed to illustrate the conceptual principles presented in Chem 481. Laboratory Practical Exam at semester's end. Final project. Prereq: Chem 481. Coreq: Chem 482. Sem hrs: 3 spring.

Chem 495. Special Topics. 1-3(1). Selected topics in chemistry. Final exam or final report. Prereq: DFC approval. Sem hrs and offering time determined by DFC (not more than 3 sem hrs).

Chem 499. Independent Study. 3(0). The capstone course for all Chemistry majors. A hands-on laboratory experience applying the culminated knowledge and skills gained in the major towards a novel research project. Individual research using state-of-the-art equipment under the direction of a faculty member. Includes use of chemical literature. Final report. Prereq: DFC approval. Sem hrs: 3 fall or spring.

- Chem 499A. Independent Study. 2(0). Sem hrs: 2 fall or spring.
- Chem 499B. Independent Study. 1.5(0). Sem hrs: 1.5 fall or spring.
- Chem 499C. Independent Study. 1(0). Sem hrs: 1 fall or spring.

CIVIL ENGINEERING (Civ Engr)

Offered by the Department of Civil and Environmental Engineering (DFCE)

Civ Engr 215. Computer Applications for Civil Engineers. 3(1). Application of commercially available computer-based tools for solving common types of Civil Engineering problems. Use of spreadsheet and relational database software with an emphasis on information input, data handling, and professional output. Introduction to geospatial mapping capabilities and using GIS technologies. Component, architectural, and engineering modeling using state-of-the-art computer-aided design (CAD) software, including presentation and working drawings. Final project. Prereq: Cadets who are not Civil or Environmental Engineering majors must receive approval from DFCE AIC before enrolling. Sem hrs: 3 fall or spring.

Civ Engr 330. Elementary Structural Analysis. 3(1). Static analysis of determinate structures. Stresses and deformations in beams, trusses, and frames. Final exam. Prereq: Engr Mech 220 and completed or enrolled in Math 245. Sem hrs: 3 fall or spring.

Civ Engr 351. Civil Engineering Practices - Field Engineering. 3(0). This two-phase course includes Operation Civil Engineering Air Force (OpsCEAF) and a three week field experience at the USAFA Field Engineering and Readiness Laboratory (FERL). Second-class cadets spend first period at a government facility working on a project in the civil engineering field. Participants will be scheduled for a second or third summer period leadership program. The three week field experience introduces surveying, construction materials, design of concrete mixes, and hands-on construction using metal, timber, asphalt and concrete, and working knowledge of environmental systems. Cadets will construct various projects that they will design in later civil and environmental engineering courses. OpsCEAF is in lieu of Operation Air Force (Mil Tng 301). OpsCEAF credit is Pass/fail. Civ Engr 351 is graded. Prereq: Engr Mech 220; department approval required for non-Civ Engr majors. Sem hrs: 3 summer (5 week course beginning after final exams).

Civ Engr 352. Lightweight Concrete Design, Analysis, and Construction. 3(2). The design, analysis, and construction of the concrete canoe is an integration of several course experiences and develops cadets' understanding of fundamental concepts in concrete, structural design, hydraulics, and computer applications. Cadets learn skills in project management, design, concrete technology, material testing, and physical construction. Cadets use computer tools such as computer aided design to complete three-dimensional modeling, project management software to develop and track progress of the project, spreadsheets to design concrete mix, and structural analysis packages to determine forces within the structure. Extensive time is spent in the laboratory testing the engineering properties of concrete mixes and composite materials. Final report and final project. Prereq: Civ Engr 351 or department approval. Sem hrs: 3 fall.

Civ Engr 355. Blast Effects and Protective Structures. 3(1). The purpose of this course is to educate cadets on a broad range of technical issues dealing with mitigating the severe loading effects associated with abnormal loading incidents (e.g., blast, shock, impact, etc.). This course introduces cadets to the effects of conventional and nuclear weapons on structures; enables cadets to define the threat of the hazard, define the loads on the structure, make a structural assessment of potential cause-and-effect relationships and recommend mitigation measures for designing or modifying the structural system to protect the people inside from the effects of explosive devices. This course presents the latest information on designing buildings to save lives—from understanding the nature of threats to analysis and design—and will provide cadets with practical information on performance and design requirements for hardened facilities. In addition, this course provides information on blast damage assessment issues that will provide forensic and rescue personnel with information vital to rescue and investigative efforts after a catastrophic structure failure. Final project. Coreq: Civ Engr 372. Sem hrs: 3 spring.

Civ Engr 361. Fundamental Hydraulics. 3(1) Application of the principles of incompressible fluid mechanics. Topics include: fluid properties, manometry, forces on submerged bodies, open channel flow, and conduit flow. Impulse-momentum, energy methods, Hardy-Cross method for balancing flows in distribution systems and sewer design are also covered. Final exam. Prerequisites: Engr Mech 220 and Civ Engr 351 or department approval. Sem hrs: 3 fall.

Civ Engr 362. Introduction to Environmental Engineering. 3(1). Fundamental theory and principles and preliminary design of unit operations in environmental engineering. Topics include air and water pollution, municipal and hazardous waste treatment, water chemistry, microbiology, mass balance, reactor theory and kinetics, and physical process theory. Final exam. Prereq: Engr Mech 220. Coreq: Civ Engr 361. Sem hrs: 3 fall or spring.

Civ Engr 368. Hydrology & Contaminant Transport. 3(1). A comprehensive introduction to groundwater and surface water hydrology. Contaminant transport of chemicals in ground and surface waters is also covered. Topics include hydrologic cycle, surface water flow, hydrographs, stormwater runoff estimation, stormwater collection system design, transport in surface water, groundwater flow, well hydraulics, transport in the subsurface. Final exam. Prereq: Civ Engr 361. Coreq: Civ Engr 362, Civ Engr 390. Sem hrs: 3 spring.

Civ Engr 369. Introduction to Air Pollution. 3(1). An in-depth introduction into air pollution covering such topics as the causes, sources and effects of air pollution. Topics include: legislative standards (ambient and source) for pollutants, regional and global air pollution issues, environmental health, indoor air pollution, noise, air pollution instrumentation and gas flow measurements, basic meteorology, and dispersion modeling. The course work will involve several laboratory exercises. Final exam. Coreq: Civ Engr 362. Sem hrs: 3 fall.

Civ Engr 372. Behavior and Analysis of Structures. 3(1). Behavior and analysis of statically determinate and indeterminate beams, frames, and trusses. Displacement calculations using virtual work. Analysis of indeterminate structures by consistent displacements and moment distribution. Introduction to general stiffness method. Computer analysis projects. Final exam. Prereq: 'C-' or better in Civ Engr 330 or department approval. Sem hrs: 3 fall or spring.

Civ Engr 373. Behavior and Design of Steel Members. 3(1). Behavior of structural steel beams, columns, and connections, and frames; using the Load and Resistance Factor Design method. Design for tension, flexure, shear, compression, and combined loads. Design of bolted and welded steel connections. Design project. Final exam. Prereq: completed or enrolled in Civ Engr 372. Sem hrs: 3 spring.

Civ Engr 390. Introduction to Soil Mechanics. 3(2). Engineering properties of soils, soil classification, compaction, hydraulic conductivity, consolidation, shear strength and introduction to slope stability and foundation design. Soils laboratories with reports. Final exam. Prereq: Civ Engr 351 or department approval. Sem hrs: 3 fall or spring.

Civ Engr 405. Civil Engineering Seminar. 0(1). A course designed to give Civil Engineering majors the opportunity to synthesize and apply the concepts they have learned throughout their undergraduate education. Topics discussed include engineering ethics and those that cadets may encounter in the Air Force after graduation. The course meets once per week. Open only to 1° Civil Engineering majors. Sem hrs: 0 spring. Pass/fail, no final.

Civ Engr 463. Wastewater Treatment Plant Design. 3(2). Design of facilities for physical, chemical, and biological treatment of wastewater; and treatment and disposal of sludge. Coverage of advanced wastewater treatment and land treatment systems. Laboratory exercises

analyzing raw sewage with data being used for the design processes. Final design project consists of a complete wastewater treatment plant design. Prereq: Civ Engr 362. Sem hrs: 3 spring.

Civ Engr 464. Architectural Design. 3(2). Design of a single-family residence. Uses computer-aided-design and drafting (CADD) software in developing design: site plan, functional layout, framing, energy and electrical planning, aesthetic design, landscaping, and mechanical planning. Produces set of design working drawings by end of course. Final project. Prereq: Civ Engr 215 or Civ Engr 352; Civ Engr 351; or department approval. Sem hrs: 3 fall or spring.

Civ Engr 467. Water Treatment Principles and Design. 3(1). Introduction to advanced reactor analysis, including equilibrium thermodynamics, kinetics, ideal reactors, and non-ideal reactor analysis. Application of these principles to the design of water treatment unit operation, including those used for treatment of drinking water and remediation of contaminated waters. Topics include the design of adsorption, ion exchange, reverse osmosis, air stripping, coagulation and sedimentation, filtration, and disinfection processes. Includes two complete design exercises. Final report. Prereq: Civ Engr 362. Sem hrs: 3 fall.

Civ Engr 468. Solid and Hazardous Waste Facilities Design. 3(1). Design and analysis of solid and hazardous waste management systems including collection, transport, processing, resource recovery, and disposal. Hazardous waste regulations, treatment and site cleanup are addressed. Final design project consists of a complete landfill design. Prereq: Civ Engr 362. Sem hrs: 3 fall.

Civ Engr 469. Design of Air Pollution Controls. 3(1). Modeling and predicting the effects of air pollution, and the design of the facilities for air pollution control. The design of electrostatic precipitators, cyclones, bag houses and other methods for the control of air contaminants are addressed. Final design project. Prereq: Civ Engr 369. Sem hrs: 3 spring.

Civ Engr 473. Structural Design. 3(2). Design of a multi-story steel and reinforced concrete building, including structural frame, floor and roof system, and foundation. Computer-aided analysis and design. Final report. Prereq: Civ Engr 373 and Civ Engr 474. Sem hrs: 3 spring.

Civ Engr 474. Behavior and Design of Concrete Members. 3(1). Properties of reinforced concrete. Behavior and ultimate strength design of reinforced concrete beams, slabs, columns, and footings. Design for flexure, shear, compression, bond, and anchorage. Design project. Final exam. Prereq: Completed or enrolled in Civ Engr 372. Sem hrs: 3 fall.

Civ Engr 480. Project Management and Contract Administration. 3(1). This is the final course in the civil and environmental engineering capstone sequence. First-class students integrate discipline-specific design work from previous courses through a semester project. Cadets take an owner's project requirements through stages of scope definition, budgeting and planning, conceptual design, scheduling, and construction contract administration. Cadets apply engineering standards and consider realistic issues including engineering economics, constructability, environmental requirements, sustainability, and safety. The course addresses and applies management topics and concepts of planning, organizing, leading, and controlling in

the context of a capstone engineering project. The course concludes with a project competition involving construction industry professionals. Serves as a core replacement Mgt 400 for Civ Engr and Env Engr majors. Final project. Prereq: One of the following: Civ Engr 464, Civ Engr 468, Civ Engr 474, Civ Engr 485, Civ Engr 491, or department approval. Sem hrs: 3 spring.

Civ Engr 484. Applied Construction Principles. 3(1). Students in this course will learn about design and construction processes, including the Design-Build approach to delivering building construction projects. They will study the roles of design-build team members, the steps in the process, and its legal aspects. They will prepare to participate in one or more categories of the Associated Schools of Construction annual regional student competition. They will play the role of a firm competing to win a project award. Student products will include items such as a qualifications package, site plans, conceptual architectural designs, cost estimates, project schedules, and construction plans. The students will also present their plans to a panel of industry representatives. At the completion of the competition, students will work on another project for the remainder of the semester. Students from this course will be key leaders in the "DFCE Apprentice" event in our Civ Engr 480 capstone course. Final project and final presentation. Prereq: Civ Engr 485 and Civ Engr 491. Sem hrs: 3 spring.

Civ Engr 485. Construction Project Management. 3(1). This course emphasizes the methods and materials of construction as well as the management practices required to run a successful construction project. Topics include construction materials, project planning, scheduling, cost estimating, and field engineering. A semester project, in the form of a detailed study of a major construction project, complements the classroom experience. Final project. Prereq: Department approval. Sem hrs: 3 fall.

Civ Engr 486. Applied Construction Practices. 1.5(1). Students in this course will learn about construction processes and project delivery methods. Their work will be in preparation to form one or more teams to compete in the annual Associated Schools of Construction regional student competition each February. The cadet teams will play the role of construction or design-build firms competing to win a project award. Student products will include a qualifications package, site plans, conceptual architectural and/or engineering designs, cost estimates, project schedules and construction plans. The students will also present their plans to a panel of industry representatives. They will compete against other teams from universities across the western U.S.. The deliverables include the final versions of all cadet work and their lessons learned for next year's teams. Final project and presentation. Prereq: Civ Engr 464, 485, or 491. Sem hrs: 1.5 fall.

Civ Engr 488. Pavement Design and Transportation. 3(1). Fundamental theory and design principles of both flexible and rigid pavements. Theory and practice in transportation systems to include airfield and highway design, traffic analyses, horizontal and vertical roadway alignment, pavement evaluation and maintenance, strengthening techniques, and repair. Final exam or project. Prereq: Civ Engr 390. Sem hrs: 3 spring.

Civ Engr 491. Foundation Engineering. 3(1). Students design a facility foundation. Topics include site investigation, bearing capacity and settlement, analysis and design of deep and

shallow foundations. Introduction to lateral earth pressures. Final design project. Prereq: Civ Engr 390. Sem hrs: 3 fall.

Civ Engr 492. Earth Structures. 3(1). Estimate/predict lateral earth pressures, analyze slope stability, design embankments, design retaining walls, and summarize current research on retaining wall design. Final design project. Prereq: Civ Engr 390. Sem hrs: 3 spring.

Civ Engr 495. Special Topics. 1-3(1). Selected topics in civil engineering. Final exam or final report. Prereq: Department approval. Sem hrs and offering time determined by department (not more than 3 sem hrs).

Civ Engr 499. Independent Study. 3(0). Individual study and research in an advanced civil engineering topic approved by the department head. Final report. Sem hrs: 3 fall or spring.

- Civ Engr 499A. Independent Study. 2(0). Sem hrs: 2 fall or spring.
- Civ Engr 499B. Independent Study. 1.5(0). Sem hrs: 1.5 fall or spring.
- Civ Engr 499C. Independent Study. 1(0). Sem hrs: 1 fall or spring.

COMMISSIONING EDUCATION (Cmsng Edu)
Offered by the Commandant of Cadets

Cmsng Edu 100/101. Fourth-Class Commissioning Education. 0(1). Pass/fail. The fall semester focuses on the development of personal leadership competencies, such as mastering primary duties and personal conduct policies, building personal awareness, honing followership skills, adopting core values, and setting the example. Fourth-class cadets also receive an introduction into Air Force history and potential career opportunities. Spring semester Cmsng Edu 101 introduces cadets to the general organization of the Department of Defense and the Air Force, further develops their understanding of the Air Force Core Values, and introduces the interpersonal leadership competencies they will use and develop during their third-class year.

In addition, this course/program is a primary contributor to the development and assessment of the following USAFA outcomes:

Responsibilities: *Ethical Reasoning and Action, Respect for Human Dignity, Lifelong Development and Contributions*
Skills: *Decision Making, Courage*
Knowledge: *Civic, Cultural, and International Environments, Ethics and the Foundations of Character*

Cmsng Edu 200/201. Third-Class Commissioning Education. 0(1). Pass/fail. The fall semester focuses on the further development of interpersonal leadership competencies, such as coaching others, teambuilding, a broader appreciation of Air Force culture and doctrine, effective communication, and problem solving skills. Third-class commissioning education in the spring semester introduces cadets to team leadership competencies they will use and further develop during their second-class year.

In addition, this course/program is a primary contributor to the development and assessment of the following USAFA outcomes:

Responsibilities: *Ethical Reasoning and Action, Respect for Human Dignity, Lifelong Development and Contributions*

Skills: *Decision Making, Teamwork*
Knowledge: *Heritage and Application of Air, Space, and Cyberspace Power; Ethics and the Foundations of Character*

Cmsng Edu 300/301. Second-Class Commissioning Education. 0(1). Pass/fail. The fall semester builds on the skills developed in the previous two years and exposes cadets to principles of leadership and management of larger groups, such as applying team dynamics, integrating individual skills in support of a task, decision making skills, focusing on organizational goals, and broadening one's mentoring role. Commissioning education in the spring semester introduces cadets to organizational leadership competencies they will use and develop during their first-class year.

In addition, this course/program is a primary contributor to the development and assessment of the following USAFA outcomes:

Responsibilities: *Ethical Reasoning and Action, Respect for Human Dignity, Lifelong Development and Contributions*
Skills: *Critical Thinking, Decision Making, Teamwork*
Knowledge: *Civic, Cultural, and International Environments, Ethics and the Foundations of Character*

Cmsng Edu 400/401. First-Class Commissioning Education. 0(1). Pass/fail. The fall semester continues to build on the skills developed in the previous three years and points cadets towards organizational leadership competencies, such as influencing element, flight, squadron, and wing policy, integrating the efforts of small units toward broader objectives, and developing the talents of others. First-class commissioning education in the spring semester introduces cadets to operational Air Force concepts, personnel systems and programs, base services, and principles essential to the successful transition from cadet to Air Force officer.

In addition, this course/program is a primary contributor to the development and assessment of the following USAFA outcomes:

Responsibilities: *Respect for Human Dignity, Lifelong Development and Contributions*
Skills: *Decision Making, Teamwork*
Knowledge: *Ethics and the Foundations of Character*

<u>COMPUTER SCIENCE</u> (Comp Sci)

Offered by the Department of Computer Science (DFCS)

Comp Sci 110. Introduction to Computing. 3(1)*. An introduction to principles, applications, capabilities, and limitations of computer systems. Topics include computer hardware, algorithms, information representation, networks, computer security, computers and society, system and application software, and computer programming. Students will learn how to use their own computers more effectively. Final exam. Prereq: None. Sem hrs: 3 fall or spring.

In addition, this course/program is a primary contributor to the development and assessment of the following USAFA outcomes:

Skills: *Quantitative and Information Literacy*
Knowledge: *Heritage and Application of Air, Space, and Cyberspace Power, Principles of Engineering and the Application of Technology*

Comp Sci 210. Introduction to Programming. 3(2). Introduces the fundamentals of software development as a foundation for a more advanced study of computer science. Topics include programming constructs, appropriate use of fundamental data types and class libraries, error handling using exceptions, problem-solving strategies, algorithms, data structures, recursion, and object-oriented concepts. Considerable attention is devoted to developing effective software engineering practices, emphasizing design, documentation, encapsulation, procedural abstraction, testing, debugging, and software reuse. Final exam. Prereq: Comp Sci 110. Sem hrs: 3 fall.

Comp Sci 211. Introduction to Programming for Scientists and Engineers. 3(2). Introduces and applies the fundamental techniques of scientific programming as a foundation for solving scientific and engineering problems using computers. Topics include programming constructs, problem-solving strategies, testing and debugging, effective use of pre-defined functions, and vector and matrix operations, with a focus on engineering and scientific applications. Cadets will learn a programming language and development environment that is suited for science and engineering disciplines. Final exam. Prereq: Comp Sci 110. Sem hrs: 3 fall or spring.

Comp Sci 220. Data Abstraction. 3(1). Continues the introduction of software development, with a particular focus on the ideas of data abstraction, object-oriented programming, and fundamental data structures. Topics include recursion, computational complexity, event-driven programming, graphical user interface design and implementation, and fundamental computing algorithms. Final exam. Prereq: C or better in Comp Sci 210. Sem hrs: 3 spring.

Comp Sci 351. Computer Organization and Architecture. 3(1). Introduces basic computer logic systems, major types of computing system organizations, and machine and assembly language programming. Topics include digital logic, processor architecture, data representation, memory architecture, performance analysis, computer arithmetic, pipelining, and multi-processing. Final exam. Prereq: Comp Sci 210 or department approval. Sem hrs: 3 spring.

Comp Sci 359. Programming Paradigms. 3(1). An applied course studying four different programming paradigms. Imperative, Object-Oriented, Functional and Logic programming paradigms will be covered. Programming languages and specific language constructs supporting the four paradigms are covered, but the emphasis is on how to think about programming in each paradigm. At least one programming project is assigned for each of the four paradigms. Final exam. Prereq: Comp Sci 220. Sem hrs: 3 fall.

Comp Sci 362. Computer Simulation. 3(1). Introduction to computer simulation and modeling of real-world systems. Topics include system analysis and modeling; principles of computer simulation methodologies; data collection and analysis; selecting distributions; simulation programs using general purpose languages; simulation using special simulation languages; analysis of results; and selecting alternative systems. The course includes the preparation of several computer programs using general and special purpose simulation languages and a group project involving the analysis of a real world system. Final project. Prereq: Comp Sci 210 or Comp Sci 211, Math 356 or Math 377 with coreq of Math 378. Sem hrs: 3 spring.

Comp Sci 364. Information Storage and Retrieval. 3(1). Introduction to the basic concepts of database and information storage systems. Topics include data models, database design theory, database performance, transaction processing, web-database interaction, techniques for handling large volumes of data, and contemporary database issues. Hands-on projects emphasize basic database and information storage and retrieval techniques. Final Project. Prereq: Comp Sci 210 or Comp Sci 211. Sem hrs: 3 spring.

Comp Sci 380. Design and Analysis of Algorithms. 3(1). Advanced design and analysis of algorithms used in modern computing systems. Topics include analysis of algorithms, basic structures, advanced abstract data types, recursion, computability and complexity. Problem solving and analytical skills are improved by examining the application of abstract data types to several problem domains with an emphasis on the impact of design decisions on algorithm performance. Concepts are reinforced by several programming exercises. Final exam. Prereq: Comp Sci 220 and Math 340. Sem hrs: 3 spring.

Comp Sci 426. Languages and Machines. 3(1). Students will learn the theoretical foundations of computer science and apply these concepts to appropriate stages in compiler implementation. Topics include finite automata, formal language theory, grammars, scanners, parsing techniques, code generation, symbol tables, and run-time storage allocation. Students will design and implement a syntax-directed compiler for a high-order programming language. Final exam. Prereq: Comp Sci 351 and Comp Sci 359. Sem hrs: 3 fall.

Comp Sci 431. Cryptography. 3(1). Introduces the principles of cryptography and number theory. Topics include: primes, random numbers, modular arithmetic and discrete logarithms, symmetric encryption, public key encryption, key management, hash functions, digital signatures, authentication protocols and protocols for secure electronic commerce. Elliptic curves and quantum cryptography will also be introduced. Final exam. Prereq: Math 340; or Math 372 or Math 374 coreq; or department approval. Sem hrs: 3 fall.

Comp Sci 438. Computer Security and Information Warfare. 3(1). An introduction to the technical aspects of Information Warfare. Emphasis is on how computer systems and networks are secured in order to protect them from an Information Warfare attack. Topics include Viruses, Worms, Hacking, Phreaking, authentication, access and flow controls, security models, encryption, intrusion detection, and firewalls. Final project. Coreq: Comp Sci 467. Sem hrs: 3 fall.

Comp Sci 453. Software Engineering I. 3(2). This is the first course of a two-semester capstone sequence for Computer Science majors. Students learn about issues related to developing large software systems. Topics include software development process lifecycles, software project management, configuration management, quality assurance management, requirements elicitation, system analysis, specification, software architecture, high-level design, and testing. Students begin work on a two-semester software development project for a real customer. Final project. Prereq: C1C standing, Comp Sci 210 or Comp Sci 211. Sem hrs: 3 fall.

Comp Sci 454. Software Engineering II. 3(2). This is the second course of a two-semester capstone sequence for Computer Science majors. Students learn about issues related to

developing large software systems. Topics include detailed design, implementation, maintenance, and contemporary software engineering issues. Students complete work on a two-semester software development project for a real customer. Final project. Prereq: Comp Sci 453. Sem hrs: 3 spring.

Comp Sci 467. Computer Networks. 3(1). Examination of modern data communications systems and related security issues. Topics include the TCP/IP reference model, data transmission theory, network design issues, internetworking, routing, network protocols, implementation of networks, web application architecture, communications security, and cryptography. Final exam. Prereq: Comp Sci 210 or Comp Sci 211. Sem hrs: 3 spring.

Comp Sci 468. Network Security. 3(1). Focuses on the design and analysis of secure TCP/IP networks. Includes significant hands-on implementation of current network security models and theory in an advanced, multi-operating system lab. Topics include: secure network design principles, advanced TCP/IP security issues, packet filtering, stateful and proxy firewalls, network perimeters, threat and vulnerability assessment, host hardening honeynets, network intrusion detection, and computer forensics. The culmination of the course is an exercise where cadets design, configure, and secure a live network that is attacked by "Red Teams." Final project. Prereq: Comp Sci 467 or department approval. Sem hrs: 3 spring.

Comp Sci 471. Artificial Intelligence. 3(1). Introduction to major subjects and research areas in artificial intelligence (AI). Topics include: problem solving techniques, knowledge representation, machine learning, heuristic programming, AI languages, expert systems, natural language understanding, computer vision, pattern recognition, robotics, and societal impacts. The course will also explore current and projected uses of AI in the Air Force. Final exam. Prereq: Comp Sci 359. Sem hrs: 3 spring of odd-numbered years.

Comp Sci 474. Computer Graphics. 3(1). Basic concepts of interactive computer graphics including both vector and raster graphics. Topics include mathematics of 2-dimensional and 3-dimensional geometric transformations, interactive techniques, graphics hardware architectures, graphic algorithms, and realism in computer-generated images. Course includes several computer projects. Final exam or final project. Prereq: Comp Sci 220. Sem hrs: 3 spring of even-numbered years.

Comp Sci 483. Operating Systems. 3(1). Examines the design and implementation of programs that manage hardware resources and provide abstract interfaces for hardware control. Topics include resource allocation, synchronization primitives, virtual memory, information protection, performance measurement, I/O sub-subsystems, and distributed computing. Final exam. Prereq: Comp Sci 220. Sem hrs: 3 fall.

Comp Sci 495. Special Topics. 1-3(1). Selected topics in computer science. Final exam or final report. Prereq: Department approval. Sem hrs and offering time determined by department (not more than 3 sem hrs).

Comp Sci 496. Computer Science Seminar. 3(1). Advanced topics in computer science. Students participate in and lead discussions on significant issues in current computer science

research as well as key historical developments. Final report. Prereq: C1C standing and department approval. Sem hrs: 3 spring.

Comp Sci 499. Independent Study. 3(0). Individual study and research supervised by a faculty member. Topic established with the department head. Final report. Sem hrs: 3 fall or spring.

- Comp Sci 499A. Independent Study. 2(0). Sem hrs: 2 fall or spring.
- Comp Sci 499B. Independent Study. 1.5(0). Sem hrs: 1.5 fall or spring.
- Comp Sci 499C. Independent Study. 1(0). Sem hrs: 1 fall or spring.

CYBER

Cyber 256. Basic Cyber Operations. 0(0). Cyber operations training supports USAFA Outcomes and helps motivate cadets towards a career in the United States Air Force. Cadets will explore the Air Force cyber mission area during this course with hands-on training designed to teach the fundamentals of establishing, operating, attacking, defending, and exploiting computers and networks. Successful completion of this course fulfills one military training requirement and the requirement for award of the Cadet Basic Cyber Badge. Pass/fail. Prereq: None. Sem Hrs: 0 summer.

Cyber 466. Cyber Instructor Training. 0(2). This course prepares cadets to become Basic Cyber (Cyber 256) Instructors. In addition to learning a variety of offensive and defensive cyber tools and techniques, students will learn and practice instructional skills and how to safely operate a cyber warfare training range. The course concludes with a qualification check ride evaluation. Successful completion will qualify cadets to upgrade their cyber badge. This course is offered in the first 20 lessons of the spring semester. Pass/fail. Prereq: Cyber 256. Sem hrs: 0 spring.

Cyber 476. Cyber Instructor. 0(0). Selected cadets serve as cadre and instructors for Cyber 256. Completion during summer fulfills a military training leadership option. Pass/fail. Prereq: Cyber 256. Sem hrs: 0 summer.

ECONOMICS (Econ)

Offered by the Department of Economics and Geosciences (DFEG)

Econ 201. Introduction to Economics. 3(1). Introduces the economic way of thinking so that graduates can understand the world around them in economic terms and apply economic concepts to the challenges they will face as Air Force officers. The course focuses on using economic analysis to improve cadets' critical thinking, decision-making, and quantitative literacy skills to make them more effective leaders. Graduates can apply these skills to analyze economic policy, defense economics, engineering economics, and personal finance issues. Graduates will also develop literacy in the national and international economic environment in order to understand contemporary issues and public policy. Final exam. Prereq: Math 141. Sem hrs: 3 fall or spring.

In addition, this course/program is a primary contributor to the development and assessment of the following USAFA outcomes:

Skills: Critical Thinking, Decision Making, Quantitative Literacy
Knowledge: Civic, Cultural and International Environments

Econ 240. Development of Economic Thought. 3(1). Modern economic theory developed in response to a variety of economic forces beginning with the Industrial Revolution through the Great Depression and into today's globalization of the world's economy. This course links these forces with some of the great economic thinkers of the past such as Adam Smith, Karl Marx, Alfred Marshall, and John Maynard Keynes. Upon completion of this course, the student will have gained an appreciation of how today's economic theories have been influenced by the economic conditions that their originators experienced. Final exam or final paper. Prereq/Coreq: Econ 201. Sem hrs: 3 spring.

Econ 301. Macroeconomic Principles for the U.S. and the World. 3(1). Foundations of key macroeconomic principles for non-econ majors. Examination of a nation's economy at the aggregate level. Analytical models are developed and applied to real-world events explaining the functioning of the macroeconomy. The focus of the course is on developing tools that can be used to analyze the macroeconomic goals and performance of economies around the world. Topics include growth, national income, inflation and deflation, unemployment, fiscal policy, monetary policy, debt, deficits, currency, exchange rates, trade, and international finance. Final exam or final paper. Prereq/Coreq: Econ 201. Sem hrs: 3 fall.

Econ 332. Microeconomic Theory I. 3(1). The first course in a calculus-based treatment of microeconomic theory. In-depth analysis of market supply and demand, utility theory, consumer optimization, demand functions, income/substitution effects, and elasticity. Includes a treatment of choice under uncertainty, markets with asymmetric information, externalities, public goods, and other related topics. Prereq: Econ 201. Final exam. Sem hrs: 3 fall.

Econ 333. Microeconomic Theory II. 3(1). The second course in a calculus-based treatment of microeconomic theory. In-depth analysis of production functions, long-run and short-run cost functions, and profit maximization. Also includes a study of market structures, game theory, and other related topics. Final exam. Prereq: Econ 332. Sem hrs: 3 spring.

Econ 351. Comparative Economic Systems. 3(1). This course is an examination of the world's major economic systems including capitalism, market socialism, and planned socialism. These systems will be examined through a critical analysis of the theoretical literature and case studies. Both economic and non-economic aspects of these systems will be examined to come to an understanding of how countries work and why countries experience different results despite similarities in their systems. Final exam or final report. Prereq: Econ 201; Econ 301 or Econ 355 recommended. Sem hrs: 3 fall.

Econ 355. Principles of Macroeconomics. 3(1). Foundations of key macroeconomic principles. Analysis of the macroeconomics of a nation at an aggregate level. Analytical models are developed and used to analyze the impacts of alternative government economic policies. Topics include inflation, unemployment, national income, the banking system, fiscal and monetary policy, debt, deficits, and international finance and trade (including exchange rates and barriers to trade). Focuses on domestic and global economic environments of organizations and discusses current and historical issues in the macroeconomy relating to real-world events. Discusses the impact of macroeconomic policies on the defense sectors. Final exam or final

paper. Prereq or Coreq: Econ 201 or Econ 332 (concurrent enrollment allowed with department approval). Sem hrs: 3 fall.

Econ 356. Macroeconomic Theory. 3(1). Analysis of national income, employment, price level determination, growth, monetary, and fiscal policies. Contemporary macroeconomic issues are explored using both closed and open economy scenarios. Modern business cycle theory and stabilization policy are examined from the vantage point of varying macroeconomic schools of thought. Final exam or final project. Prereq: Econ 355. Sem hrs: 3 spring.

Econ 365. Analysis of Economic Data. 3(1). Survey of economic data series available from the Economic Report of the President, Commerce Department, Bureau of Labor Statistics, Federal Reserve, and financial data. This course develops familiarity with macro, micro, and financial data series, what the series measure, accessing series via the internet, and basic analysis to include the use of software. Final exam or final project. Prereq: Math 356 or Math 378. Sem hrs: 3 spring.

Econ 374. Survey of International Economic Issues. 3(1). Examination of current issues in the commercial relations among nations, including international trade, international finance, economic development, and the multinational enterprise. This course is designed for cadets who are not majoring in economics. Final exam or final project. Prereq: Econ 355 or Econ 301. Sem hrs: 3 spring.

Econ 377. Financial Markets. 3(1). An introduction to and analysis of how the financial markets allocate personal and corporate resources in a modern capitalistic economy. Specific emphasis is placed on the characteristics, valuations, and functions of the various financial instruments traded in the financial markets. Also covered in some depth are the operational mechanisms of the financial markets, the relationship of government fiscal and monetary policies to finance market activity, the individual and corporate investment decision, and the understanding of financial press information. Final exam or final project. Prereq: Econ 201 and either Econ 301 or Econ 355. Sem hrs: 3 fall.

Econ 411. Introduction to Game Theory. 3(1). This course will introduce the concepts required to analyze strategic situations, or situations in which a player's payoff depend on his choices and those of the other players. Topics will include zero-sum and nonzero-sum games, normal and extensive form games, the implications of informational asymmetries on these strategic situations, auctions, and bargaining models. Developing the ability to think strategically is valuable to everyone, but this course will be especially important for those studying any of the social sciences. Final exam or final project. Prereq: Econ 333 or Ops Rsch 330. Sem hrs: 3 fall.

Econ 422. Labor Economics. 3(1). This course examines how people make decisions regarding their participation in the labor market. Included in this course is the examination of government policies (such as social security, minimum wage, etc.) and their impacts of the supply and demand of labor. Wage determination for women and minorities will be discussed in light of the supply and demand forces in the influence of the human capital decisions made by individuals. Final exam or final paper. Prereq: Econ 333. Sem hrs: 3 spring.

Econ 447. Quantitative Economic Methods. 3(1). Analysis of economic problems through statistical and mathematical methods and the use of quantitative models. Final exam. Prereq: Econ 332 or department approval. Sem hrs: 3 fall.

Econ 450. International Economics. 3(1). This course covers several main concepts and methods of international economics, such as: the gains from and patterns of trade; motives, methods, and consequences of protectionism; and international finance. Final exam or final project. Prereq: Econ 333 and Econ 356 (or department approval). Sem hrs: 3 fall.

Econ 454. Economics of Development and Conflict. 3(1). The course focus is on theory and lessons learned for sustaining economic growth in less developed countries, with emphasis on fragile and failing states. The course discusses how economic deprivation often leads to conflict and that conflict always leads to economic challenges. The students will study the inter-agency work required for stabilization and reconstruction operations, but will spend the preponderance of time on the full range of international economic development issues. Specific topics studied in the course are economic growth, total factor productivity, income inequality, price signals, structural adjustment policies, investment, financial markets, and trade. The course is optimized for Foreign Area Studies majors in the Africa track and is an excellent complement for anyone interested in geopolitics. Prereq: Econ 201; Econ 301 or Econ 355. Final exam or final project. Sem hrs: 3 fall.

Econ 457. Economies of Asia. 3(1). This course analyzes the major issues that define Asian economies today. Major topics include internal and external balance, growth and development strategies, currency regimes, economic integration, trade and globalization, among others. The role of Asia in the world economy is analyzed. The 'Asian Miracle' and the 'Asian Crisis' are examined as they pertain to the current economic situation. Final paper or final exam. Prereq: Econ 201; Econ 301 or Econ 355. Sem hrs: 3 spring.

Econ 458. Economics of the Middle East. 3(1). A broad overview of the major economic issues affecting U.S. relations with the Middle East. Major topics include the economics of oil and energy resources, regional stability, growth and development strategies, economic integration, resource constraints, and trade. Provides an appreciation of how economics plays a role in U.S. military involvement in the region. The course pays special attention to the relationship between economic integration and regional stability. Final exam or final paper. Prereq: Econ 201; Econ 301 or Econ 355. Sem hrs: 3 spring of odd-numbered years.

Econ 459. Economics of Latin America. 3(1). A broad overview of the major economic issues affecting U.S. relations with Latin America, including trade liberalization, foreign investment, economic integration, external debt problems, environmental protection and the impact of drug production and trafficking. Provides an appreciation of the rising importance of Latin American countries as trading partners of the United States and analysis of the region's unique economic and social problems. The course pays special attention to the prospects for further regional economic integration under NAFTA and other regional trade groups. Final exam or final paper. Prereq: Econ 201; Econ 301 or Econ 355. Sem hrs: 3 spring.

Econ 465. Introduction to Econometrics. 3(1). Application of statistical tools to economic data, concentrating on methodology, econometric model building, and statistical inference. Final exam or final project. Prereq: Math 356 or Math 378. Sem hrs: 3 fall.

Econ 466. Forecasting and Model Building. 3(1). Continues development of econometric techniques, with emphasis on time series forecasting procedures and on methods to make optimal use of sparse or deficient data in statistical model estimation. This course is recommended for those cadets planning to pursue graduate study. Final exam, final project or final paper. Prereq: Econ 465. Sem hrs: 3 spring.

Econ 473. Public Finance. 3(1). Economics of the government sector, with emphasis on public goods, taxation, fiscal policy, and government regulation. Final exam or final report. Prereq: Econ 333 or department approval. Sem hrs: 3 fall.

Econ 475. Money, Banking and Financial Institutions. 3(1). Advanced treatment of money and its role in the economy. Critical analysis of financial structure and institutions, the Federal Reserve System, and the increasing importance of the global financial arena. Special emphasis is placed on financial events and policy issues. Final exam or final project. Prereq: Econ 356 or department approval. Sem hrs: 3 spring.

Econ 478. Seminar in Defense Economics. 3(2). This course applies macroeconomic and microeconomic theories to analyze a variety of defense policy issues. Examples of topics typically covered include: defense alliances, military personnel system and pay, the defense industrial base and acquisition. The course will meet for two hours every other lesson. Final exam or final report. Prereq: Econ 333 or Mgt 423. C1C standing or department approval. Sem hrs: 3 spring.

Econ 495. Special Topics. 3(1). Selected topics in economics of either an advanced treatment or general interest orientation. Final exam or final report. Sem hrs: 3 fall or spring.

Econ 499. Independent Study. 3(0). Tutorial investigation of a specific area of economics. Final report. Sem hrs: 3 fall or spring.

- Econ 499A. Independent Study. 2(0). Sem hrs: 2 fall or spring.
- Econ 499B. Independent Study. 1.5(0). Sem hrs: 1.5 fall or spring.
- Econ 499C. Independent Study. 1(0). Sem hrs: 1 fall or spring.

ELECTRICAL AND COMPUTER ENGINEERING (ECE)

Offered by the Department of Electrical and Computer Engineering (DFEC)

ECE 210. Principles of Air Force Electronic Systems. 3(1). An introduction to electrical and computer engineering principles applied to Air Force electronic systems through signal analysis and electronic system design and evaluation. Topics include signal representation, the realization of digital and analog systems using electronic functions, and their application to Air Force systems. This course is intended for cadets who have declared or are considering declaring the Electrical Engineering and Computer Engineering majors. Content of the course is similar to ECE 315; however, additional emphasis is placed on exploring concepts through the

use of simulation and lab exercises. Lab. Final exam or project. Prereq: DFEC Department Head approval. Sem hrs: 3 fall or spring.

ECE 231. Differential Equations with Circuit Applications I. 3(1). An introduction to the analysis of linear ordinary differential equations, circuit analysis and system design. Topics include circuit models and simulations of electrical devices and systems, nodal and mesh analysis, Thévenin and Norton equivalent circuits, dependent sources, operational amplifier circuits, first- and second-order, linear ordinary differential equations, transient and steady-state responses of first-order and second-order circuits, and military and civilian applications. Lab. Final exam. Prereq: Math 142. Sem hrs: 3 fall or spring. ECE 231 is a core substitute course for ECE 315.

In addition, this course/program is a primary contributor to the development and assessment of the following USAFA outcomes:

Skills: Decision Making

Knowledge: Principles of Engineering and the Application of Technology

ECE 281. Introductory Digital Systems. 3(1). An introduction to the fundamental principles of logic design. Topics include Boolean algebra, combinational and sequential logic networks with basic design and analysis techniques, *VHDL, FPGA*, and an introduction to computer instruction set architecture and implementation. Assembly language programming is used as a means of exploring instruction set architectures. Laboratory projects include the design of digital systems and the analysis of computer architecture. Lab. Final exam. Sem hrs: 3 spring.

ECE 315. Principles of Air Force Electronic Systems. 3(1). An introduction to electrical and computer engineering principles applied to Air Force electronic systems through signal analysis and electronic system design and evaluation. Topics include signal representation, the realization of digital and analog systems using electronic functions, and their application to Air Force systems. Lab. Final exam. Prereq: Physics 215. Sem hrs: 3 fall or spring.

In addition, this course/program is a primary contributor to the development and assessment of the following USAFA outcomes:

Skills: Decision Making

Knowledge: Principles of Engineering and the Application of Technology

ECE 321. Electronics I. 3(2). An introduction to semiconductor electronics. Covers qualitative and quantitative analysis of semiconductor devices with emphasis on the diode and field effect transistor. Includes modeling, analysis, and design of related circuits, including combinational and sequential digital logic. Lab. Final exam. Prereq: ECE 231. Sem hrs: 3 fall.

ECE 322. Electronics II. 3(2). A continuation of ECE 321 for El Engr majors. Extends basic semiconductor concepts to the bipolar junction transistor. Extends modeling and circuit analysis processes to circuits containing multiple transistors including differential/operational/power amplifiers, frequency response, feedback, and stability. Lab. Final exam. Prereq: ECE 321. Sem hrs: 3 spring.

ECE 332. Differential Equations with Circuit Applicatoins II. 3(1). A continuation of differential applications, circuit analysis and systems design. Topics include sinusoidal steady

state response, Laplace transform techniques with circuit analysis applications, frequency response of first- and second-order circuits and analog filter design. Final exam. Prereq: ECE 231. Sem hrs: 3 fall or spring.

ECE 333. Continuous-Time Signals and Linear Systems. 3(1) An introduction to analog signal processing by linear, time-invariant systems. Topics include signal characterization, convolution, Fourier analysis methods, and state variable techniques. Final exam. Prereq: ECE 332. Coreq: Math 346. Sem hrs: 3 spring.

ECE 343. Electromagnetics. 3(1). The study of Maxwell's Equations, plane waves, transmission, and radiating systems. Topics include wave propagation, transmission lines, waveguides, and antennas. Lab. Final exam. Prereq: Physics 215, Math 346, and Engr 311 or department approval. Sem hrs: 3 spring.

ECE 360. Instrumentation Systems. 3(1). Principles and design of modern data acquisition and instrumentation systems for non-electrical engineering majors. Includes measurement techniques, transducers, analog and digital data processing systems, and displays. Lab. Final exam. Prereq: ECE 315 or ECE 231. Sem hrs: 3 spring.

ECE 373. Digital VLSI Circuits. 3(2). A continuation of the study of electronics for Computer Engineering majors. Applies diode and field effect transistor concepts to the design and implementation of Very Large Scale Integrated (VLSI) circuits. Applies VHDL descriptions in concert with logic synthesis tools to generate mask level implementations of physical VLSI circuit design. Lab. Final project. Prereq: ECE 281 and ECE 321. Sem hrs: 3 spring.

ECE 382. Computer Architecture and Microcontrollers. 3(1). An introduction to computer architecture and microcontrollers. Specific computer architecture topics include instruction set architecture and the design and implementation of data paths and processor controllers based on a provided computer instruction set architecture. Provides a broad-base understanding of microcontroller systems. The microcontroller principles presented provide a foundation that can be used in other courses to simplify (in some cases, substantially) projects. Includes design, application, interfacing, assembly language, and microcontroller hardware. Laboratory projects emphasize computer architecture implementation, assembly language programming, and microcontroller analysis. Lab. Final project. Final exam. Prereq: Comp Sci 110 and ECE 281. Sem hrs: 3 fall.

ECE 383. Microcomputer System Design I. 3(2). A course in the design of digital systems using microprocessors. Topics include design, application, interfacing, microcontroller hardware subsystems, input/output, peripherals, and hardware-software interfacing techniques. Lab. Final exam or final project. Prereq: ECE 231, ECE 281, ECE 382. Sem hrs: 3 spring.

ECE 387. Introduction to Robotic Systems. 3(1). Provides fundamental knowledge on robotic systems. The course topics include kinematics, dynamics, motion control, controller design, and trajectory planning of robot manipulators. Introduction to basic computer vision techniques. Lab. Final project. Prereq: Math 245 or department approval. Sem hrs: 3 spring.

ECE 434. Discrete-Time Signals and Systems. 3(1) An introduction to digital signal processing. Topics include classical solutions to linear difference equations, the z-transform, digital filter design, quantization effects of Analog-to-Digital and Digital-to-Analog converters, frequency analysis of decimation and interpolation, discrete Fourier transform, and the fast Fourier transform. Final exam. Prereq: ECE 332. Sem hrs: 3 fall.

ECE 444. Applied Field Theory. 3(1). Topics include antennas, fiber optics, scattering, Fourier optics, radiowave propagation, radar cross-section, and numerical methods. The analysis and design of practical systems is emphasized. A few lessons are reserved for current state-of-the-art topics, such as stealth technology, adaptive antennas, and holography. Lab. Final project. Prereq: ECE 343 or department approval. Sem hrs: 3 fall.

ECE 446. Applied Communication Systems. 3(1). An introduction to modern electronic communications systems with application in satellite communications. The performance of various analog and digital modulation and detection methods are analyzed. Coverage includes theory of operations of various modulation systems, effects of random noise, bandwidth, propagation channels, and other design constraints. ECE 446 is not appropriate for ECE majors. Lab. Final exam. Prereq: Math 346, Math 356, and Engr 342. Sem hrs: 3 fall.

ECE 447. Communications Systems. 3(1). An introduction to modern electrical communications. The performance of various modulation and detection methods for both analog and digital systems are analyzed. Coverage includes theory of operation, effects of random noise, bandwidth and other communication design constraints. Lab. Final exam. Prereq: ECE 333 and Math 356. Sem hrs: 3 fall.

ECE 448. Wireless Communications. 3(1). A follow-on course to ECE 447 that applies the knowledge of random processes and spectral analysis to the performance of wireless communication corrupted by noise. Advanced topics that vary from semester to semester include satellite communications, image processing, data communications, and fiber optics. Lab. Final exam or final project. Prereq: ECE 343 and ECE 447. Sem hrs: 3 spring.

ECE 463. Capstone Design Project I. 3(2). First course in the two-semester capstone design sequence for Electrical Engineering majors. Presents contemporary methods essential to design, planning, and execution of complex electrical and computer engineering projects. Includes instruction in contemporary Air Force project management methods and tools, organization of requirements, software and hardware specification and design, hardware fabrication, quality assurance, and testing. Planning and prototyping the semester-long design project is completed in this course. Final project. Prereq: C1C standing and department approval. Sem hrs: 3 fall.

ECE 464. Capstone Design Project II. 3(2). Second course in the two-semester project design sequence for Electrical and Computer Engineering majors. Continues study of the system software and hardware lifecycle. Emphasis is placed on system design, appropriate implementation in hardware and software, analysis, testing and evaluation, quality assurance, and documentation. The course uses a design project to emphasize Air Force applications. Final project. Prereq: ECE 463 or department approval. Sem hrs: 3 spring.

ECE 472. Instrumentation System Fundamentals. 3(1) Introduction to instrumentation components. Analysis and design of advanced operational amplifier circuits, including Schmitt-trigger, waveform generators, instrumentation amplifiers, and active filters. Discussion and practical design of transducer circuits to instrument various processes. Lab. Final exam. Prereq: ECE 322. Sem hrs: 3 fall.

ECE 473. Introduction to CMOS VLSI Circuit Design. 3(1). Introduction to design of Very Large Scale Integrated (VLSI) circuits in silicon Complementary Metal Oxide Semiconductor (CMOS) technology. Course includes discussion of the CMOS fabrication technology, combinational and sequential logic structures, analog circuit structures, computer-aided layout and simulation techniques, load/timing analysis and integrated systems design techniques/considerations. Lab. Final project. Prereq: ECE 322 or department approval. Sem hrs: 3 fall.

ECE 484. Microcomputer System Design II. 3(2). This course is the culmination of the Computer Systems Area of Study design sequence using microprocessors, special-purpose processors and field-programmable gate arrays (FPGAs). Students investigate processor architecture tradeoffs, configuration of processors on FPGAs, and advanced interfacing techniques, memory systems, and bus features including serial communications, cross-compilers, and digital-to-analog converters. This is accomplished through a series of design and laboratory design exercises. Final project. Prereq: ECE 383. Sem hrs: 3 fall.

ECE 485. Computer Architecture. 3(1). This final course in the Computer Systems Area of Study quantitatively examines trade-offs in the design of high-performance computer systems. Topics include price/performance, instruction sets, hardwired control versus microprogramming, memory hierarchy, cache memory, virtual memory, pipelining, reduced instruction set computers (RISC), input/output, and parallel processing. Final project will examine state-of-the-art processors and computers. Lab. Final project. Prereq: Math 300, Math 356, or Math 378; and ECE 382. Sem hrs: 3 spring.

ECE 495. Special Topics. 1-3(1). Selected topics in electrical engineering. Typical subjects include audio power amplifier design, laser optics and weapons, advanced signal and image processing, and advanced electronic circuits. Final project. Prereq: Department approval. Sem hrs and offering time determined by department (not more than 3 sem hrs).

ECE 499. Independent Study. 3(0). Individual study and research in an engineering design topic approved by the department head. Final paper and oral report. Prereq: Department approval. Sem hrs: 3 fall or spring.

- ECE 499A. Independent Study. 2(0). Sem hrs: 2 fall or spring.
- ECE 499B. Independent Study. 1.5(0). Sem hrs: 1.5 fall or spring.
- ECE 499C. Independent Study. 1(0). Sem hrs: 1 fall or spring.

ENGINEERING (Engr)
Offered by various departments within the Engineering Divisions

Engr 101. Introduction to Air Force Engineering. 3(1). Introduces the USAFA engineering disciplines in the context of the engineering design process. Cadets will work in teams, guided by the engineering method (an integrated decision-making process) and the system-design approach, to create solutions to real Air Force problems. They will employ modern computational tools to explore design alternatives and communicate their design solutions. Final project. Sem hrs: 3 fall or spring.

In addition, this course/program is a primary contributor to the development and assessment of the following USAFA outcomes:

Skills: Oral Communication, Decision Making, Teamwork
Knowledge: Principles of Engineering & the Application of Technology; Heritage and Application of Air, Space, and Cyberspace Power

Engr 311. Electrical Power. 3(1). Applications of the principles of energy conversion to electrical power. Electrical power includes the fundamentals of generation, transmission, distribution, and uses of electrical energy, with topics on single phase and three phase AC power, AC motors, transformers, transmission lines, power system analysis, AC to DC conversion, and DC motors. Final exam. Prereq: ECE 231. (Administered by the Department of Electrical and Computer Engineering). Sem hrs: 3 fall or spring.

Engr 341. Linear Systems Analysis and Design. 3(1). Analysis and design of linear systems. Includes modeling of electrical and mechanical systems; characterization of physical systems using linear, constant-coefficient differential equations and state-space models; Convolution using Laplace and Fourier Transform techniques; identification of system response using frequency response and Bode plots; specification of design criteria in the s-domain; and modification of system parameters to satisfy design requirements. MATLAB™ and Simulink™ are introduced as simulation tools and as a computer interface for analysis and design. Lab. Final exam. Prereq: Math 245 and ECE 231. (Administered by the Department of Astronautics). Sem hrs: 3 fall.

Engr 342. Linear Control System Analysis and Design. 3(2). Formulation and analysis of the linear control problem by transform methods. Synthesis of linear control systems emphasizing the root locus and Bode methods. Includes laboratory analysis and synthesis with real hardware and/or MATLAB™ simulation. Final project. Prereq: Engr 341 or Mech Engr 325 or concurrent enrollment in ECE 333 or department approval. (Administered by Department of Astronautics). Sem hrs: 3 spring.

Engr 400. Divisional Seminar. 3(1). An interdisciplinary study of engineering concepts, with emphasis on applications of fundamental principles. Includes case study, research, preparation and presentation of at least one major paper. Term paper or final project. Prereq: C1C Honors Degree candidate or approval of the Division Chair. (Administered by a selected engineering department). Sem hrs: 3 spring.

Engr 401. Engineering Divisional Core Substitute. 3(0). This course can only be awarded for coursework accomplished during a semester of study abroad (CSSAP), international exchange (CSEAP), or service academy exchange (SAEP). With applicable Department Head or Division Chair approval, this course can fulfill the core requirement for Astro Engr 410, Aero Engr 315, or the Science & Technology Energy/Systems Option. Sem hrs: 3 fall or spring.

Engr 402. Professional Engineering Development. 0.5(1). Review of mathematics, chemistry, properties and strengths of materials, statics, dynamics, computers, electricity and magnetism, thermodynamics, fluid mechanics, engineering economics, ethics, and business practices in preparation for the national Fundamentals of Engineering exam administered at the end of the course by the National Council of Examiners for Engineering and Surveying. A fee must be paid by the student to take the exam; therefore, taking the exam is not required. Prereq: C1C standing; accredited engineering major. Pass/fail. Sem hrs: 0.5 spring.

Engr 443. Advanced Control Theory and Design. 3(1). Introduction to advanced control techniques. Topics include state-space fundamentals, state feedback control, optimal control methods, estimation theory, and non-linear controls topics. Methods are applied to the design of control systems for aircraft and spacecraft. MatLab™/Simulink™ will be employed in three design projects. Final exam. Prereq: Math 346, Math 356 (or Math 378), and Engr 342 (or ECE 333 or Mech Engr 325 or Aero Engr 457). (Administered by Department of Astronautics). Sem hrs: 3 fall.

Engr 495. Special Topics in Engineering. 1-3(1). Selected topics in engineering, administered by various Engineering departments. Prereq: Approval of controlling department's head. Sem hrs: up to 3; offering times determined by controlling department.

<u>ENGINEERING MECHANICS</u> (Engr Mech)
Offered by the Department of Engineering Mechanics (DFEM)

Engr Mech 220. Fundamentals of Mechanics. 3(1). An introduction to the fundamental principles of statics and mechanics of materials applied to aerospace systems. Topics include: force and moment equilibrium using free body diagrams and vector algebra; stress, strain, and deformation response of deformable bodies to axial, torsional, flexural, and combined loadings; material properties and selection criteria; and failure modes of materials and structures. Laboratory exercises. Final exam. Prereq: Math 141. Coreq: Physics 110. Sem hrs: 3 fall or spring.

In addition, this course/program is a primary contributor to the development and assessment of the following USAFA outcomes:

Responsibilities:	*Ethical Reasoning and Action*
Skills:	*Quantitative Literacy; Oral Communication*
Knowledge:	*Heritage and Application of Air, Space, and Cyberspace Power; Ethics and the Foundations of Character; Principles of Engineering and the Application of Technology*

Engr Mech 305. Engineering Tools Seminar. 1(1). A junior-level seminar course designed to help Mech Engr majors transition into the degree-granting program. Content includes industrial

design and fabrication and essential skills required for success in the Mech Engr program. Emphasis is on hands-on engineering tools with in-class practice using related hardware, software, and program-specific techniques and safe operation of critical lab equipment. No homework or outside preparation required. Prereq: None. Pass/fail. Sem hrs: 1 fall.

Engr Mech 320. Dynamics. 3(1). Kinematic and kinetic analysis of particles and rigid bodies, as well as an introduction to mechanical vibrations of simple systems. Topics include kinematics in 2- and 3-dimensions using Cartesian, path, and polar coordinates; kinetics using force-mass-acceleration, work-energy, and impulse-momentum methods; introduction to single degree of freedom vibration. Methods emphasize vector solutions. Laboratory exercises. Final exam. Prereq: Engr Mech 220. Coreq: Math 245. Sem hrs: 3 fall or spring.

Engr Mech 330. Mechanics of Deformable Bodies. 3(1). Axial loading. Statically indeterminate structures. Beam theory: shear and moment diagrams, stress, and deflection. Transformation of stress and strain. Mohr's circle. Introduction to failure theories. Introduction to material selection criteria. Euler buckling. Stress concentrations. Introduction to energy methods and Castigliano's theorems. Laboratory exercises. Final exam. Prereq: Engr Mech 220. Coreq: Math 245. Sem hrs: 3 fall or spring.

Engr Mech 332. Aerospace Structures. 3(1). Analysis and design of lightweight, thin-walled and semimonocoque structures. Margin of safety. Material selection including strength, stiffness and weight. Labs, final exam or final project. Prereq: Engr Mech 330. Coreq: Aero Engr 315 and Engr Mech 320. Sem hrs: 3 spring.

Engr Mech 340. Materials Science for Engineers. 3(l). Survey of engineering applications of non-ferrous and ferrous alloys, polymers, ceramics and composites. Basic crystallographic notation and molecular structure of common engineering materials. Principles of metallurgical thermodynamics and kinetics applied to phase transformations and strengthening mechanisms. Field trip. Final exam. Prereq: Engr Mech 220. Sem hrs: 3 spring.

Engr Mech 350. Mechanical Behavior of Materials. 3(l). Behavior of materials under simple axial, biaxial and triaxial states of stress. Micromechanisms of elastic and inelastic deformation and strengthening mechanisms. Introduction to linear elastic fracture mechanics. Fatigue failure theories and fatigue crack growth analysis. Applications to design of aerospace vehicles and structures. Final exam. Prereq: Engr Mech 330. Sem hrs: 3 fall or spring.

Engr Mech 42l. Vibrations. 3(l). Free and forced vibrations of discrete systems. Effect of viscous and other types of damping considered. Matrix methods used to analyze multi-degree-of-freedom systems. Dynamic analysis of continuous systems. Final exam or final project. Prereq: Engr Mech 320 or Physics 355; completed or enrolled in Math 346. Sem hrs: 3 spring.

Engr Mech 43l. Introduction to Finite Element Analysis. 3(l). Analysis and design of truss, frame, shell, and solid structures using the direct stiffness and energy formulation methods. Topics include: theoretical development of elementary finite elements and models, thermal and dynamic structural analysis, and computer-aided design and analysis projects using commercial, professional software. Final exam or final project. Prereq: Engr Mech 330, Math 346. Sem hrs:

3 fall.

Engr Mech 440. Physical Metallurgy. 3(2). Physical metallurgy related to properties of engineering metals. Study of crystal structure and imperfections, diffusion, thermodynamics, phases and phase transformations, and material processing and how each alters material properties. Discussion of specific metals/alloy systems and design philosophies for new alloys. Thermomechanical strengthening design project and semester-long knife design and construction project. Final project. Prereq: Engr Mech 340. Sem hrs: 3 fall.

Engr Mech 445. Failure Analysis and Prevention. 3(l). Failure analysis and prevention is a technical discipline that integrates mechanical engineering, materials engineering, and structural analysis into component analysis and design. Laboratory techniques including scanning electron microscopy, metallography, non-destructive inspection, and mechanical testing will be used to determine the causes of failures of mechanical components. Re-designs may include changes in geometry, materials selection, or operation to preclude failure. Final exam or final project. Prereq: Engr Mech 350 and Engr Mech 340 (recommended). Sem hrs: 3 spring.

Engr Mech 450. Aerospace Composite Materials. 3(l). Introduction to select advanced aerospace materials. Topics covered include: mechanical behavior, design and analysis, processing, testing, inspection and repair of resin-matrix composite materials, and processing and application of metal-matrix and ceramic-matrix composites. Topics emphasized through hands-on project in design, fabrication, and testing of a composite structure. Final exam or final project. Field trip. Prereq: Engr Mech 330 and Math 245. Sem hrs: 3 fall.

Engr Mech 460. Experimental Mechanics. 3(2). Introduction to experimental measurements and their role in the mechanical design process. Includes theory and application of static and dynamic instrumentation to include: strain, vibration, temperature, and pressure transducers. Hands-on laboratory experience constitutes one-half of the course. Laboratory sessions involve analysis, design, test plans, calibration, and testing. Final exam or final report. Lab. Prereq: ECE 231, Engr Mech 320, Engr Mech 330, Math 300 or Math 356. Sem hrs: 3 fall.

Engr Mech 495. Special Topics. 3(l). Selected topics in mechanics. Final exam or final report. Prereq: Department approval. Sem hrs and offering time determined by the Department (not more than 3 sem hrs).

ENGLISH (English)
Offered by the Department of English and Fine Arts (DFENG)

English 109. Academic Communication for English as a Second Language Students. 3(1). Introduction to academic reading and writing for English as a Second Language (ESL) students. Frequent writing assignments emphasize writing for the various academic communities. Emphasis on the rhetorical, syntactical, and grammatical conventions of written English. Prerequisite to English 111 for identified ESL students. ESL students receive validation credit for For Lang 131 and, after successful completion of English 109, they will receive validation credit for For Lang 132. Sem hrs: 3 fall.

English 111. Introductory Composition and Research. 3(1). Teaches the fundamentals of sound writing and rhetorical practices. Introduces students to methods and resources for academic research. Provides instruction and practice in the presentation, integration, and documentation of researched material. Establishes the foundation for analytical thinking through frequent reading and writing assignments. Prereq: None. Sem hrs: 3 fall or spring.

In addition, this course/program is a primary contributor to the development and assessment of the following USAFA outcomes:

Skills: Information Literacy, Written Communication, Critical Thinking
Knowledge: Ethics and the Foundations of Character

English 211. Literature and Intermediate Composition. 3(1). Refines the analytical and critical reading skills introduced in English 111 through examination of significant literary texts. Course objectives include acquiring skills in analytical and argumentative writing, research methods and documentation, critical reading, and effective oral communication. Written assignments and class exercises incorporate analysis and research and provide a foundation for communication skills advanced in English 411. Midterm explication paper and final research essay. All fourth-class cadets who have validated or received transfer credit for English 111 should enroll in English 211 at their earliest opportunity. Final paper. Prereq: English 111. Sem hrs: 3 fall or spring.

In addition, this course/program is a primary contributor to the development and assessment of the following USAFA outcomes:

Skills: Information Literacy, Written Communication, Critical Thinking
Knowledge: Civic, Cultural, and International Environments

English 340. Technical Writing and Communication. 3(1). Covers the principles of organizing, developing, and writing technical information. Teaches the technical writing conventions such as headings, illustrations, style, rhetorical patterns, and tone common to scientific and technical disciplines. Considers how cyberspace effects communication practices and how today's leaders use and present technical information to accomplish the mission. Builds skills in critical thinking, writing, research, and document design. Final project. Prereq: English 111. Sem hrs: 3 fall or spring.

English 34l. Literary Criticism. 3(l). Introduces the theory and practice of literary criticism. Concentrates on major critical approaches, applying them to representative literature and showing how they lead the reader to deeper understanding and satisfaction from the work of art. Final exam or final paper. Prereq: English 111. Sem hrs: 3 fall or spring.

English 342. American Literature: Introduction. 3(1). An introduction to American fiction, poetry, drama, and prose. Representative authors might include Bradstreet, Melville, Dickinson, Douglass, Twain, Faulkner, Hemingway, and Morrison. Final exam. Prereq: English 111 or equivalent. Sem hrs: 3 fall or spring.

English 343. British Literature I: Beginnings to Romanticism. 3(1). A survey of English poetry, drama, and prose of such authors as Chaucer, Spenser, Shakespeare, Milton, Pope, Swift, Fielding, and Johnson. Final exam. Prereq: English 111. Sem hrs: 3 fall.

English 344. British Literature II: Romanticism to the Present. 3(1). A survey of later English literature focusing on Romantic poetry, Victorian prose and poetry, and the Modern novels. Works are by such authors as Byron, Shelley, Austen, Bronte, Dickens, Hardy, Conrad, Tennyson, Browning, Yeats, Lawrence, and Fowles. Final exam. Prereq: English 111. English 343 recommended prior to 344. Sem hrs: 3 spring.

English 353. Shakespeare. 3(1). Intensive study of Shakespeare's poetry and major plays within the cultural and historical perspectives of Renaissance England. Cadets attend a stage production of one play when available. Designed for cadets in any major. Final exam. Prereq: English 111. Sem hrs: 3 fall or spring.

English 360. Classical Masterpieces. 3(l). A study of influential genres of the Classical tradition, including epic, drama, and history. Authors have included Homer, Sophocles, Aristophanes, Thucydides, Virgil, Tacitus, and Dante. Key concepts to be studied include the role of the hero, the nature of political institutions, and the relationship between humans and the divine--in short, the foundations in Greek, Roman and Medieval European culture. Final exam or paper. Prereq: English 111. Sem hrs: 3 fall or spring.

English 375. Creative Writing. 3(l). Examines techniques of creative writing. In a workshop atmosphere, students experiment with writing, focusing generally on a specific form such as the short story, personal essay, or poetry. The student's own work becomes the focus of discussion and attention. Final project. Prereq: None. Sem hrs: 3 fall or spring.

English 380. Topics in Race, Gender, Class, and Culture. 3(1). Topics in literature, communication theory, linguistics, and rhetoric. The course explores issues relating to class, gender, and culture, including international and interdisciplinary topics. Emphasis changes each offering, but may focus on the literature of women, the rhetoric of class, the impact of culture on linguistics, minority writers in the Americas, or African-American influence on American culture. Seminar approach. Final exam or final paper. Prereq: English 211. Sem hrs: 3 fall or spring.

English 383. Literature and Science. 3(l). This course considers the interrelationships among science, technology, and literature. Topics vary by semester. Final project. Prereq: English 211. Sem hrs: 3 fall or spring.

English 385. Contemporary Literature. 3(1). A seminar approach study of literature written in the present and recent past—within the lifetimes of students enrolled in the course. Several genres may be offered: novels, short fiction, poetry, memoir, personal essay, creative nonfiction, story-cycles, etc. Final project. Prereq: English 211. Sem hrs: 3 fall or spring.

English 390. Junior English Seminar. 3(1). A focused survey course, taught seminar style that examines a literary period through a literary genre or representative authors. Possible examples are “Medieval Literature,” “Nineteenth-Century American Novel,” “Restoration and Eighteenth-Century Literature,” “History of the English Language,” or “Modernism.” Possible literary genres may include satire, short story, novel, lyric poetry, epic poetry, drama, political essay, creative non-fiction, biography, and memoir. Final paper. Prereq: English 341. Sem hrs: 3 fall

or spring.

English 411. Language, Literature, and Leadership: Advanced Writing & Speaking. 3(1). Building on English 111 and English 211, this capstone course focuses on the moral and intellectual aspects of war as expressed in the literature of our profession: biographical, autobiographical, and fictional accounts, along with the oratory of prominent public figures in times of national crisis. Rigorous written and oral assignments give cadets the opportunity to reflect on the inviolable bond that unites successful leadership with its moral, intellectual, and emotional foundations. The text list comprises major canonical works of fiction, memoir, and oratory that address the concreteness and complexity of war as well as the ethical issues of leadership. Prereq: English 211 or Hum 200. Sem hrs: 3 fall or spring.

In addition, this course/program is a primary contributor to the development and assessment of the following USAFA outcomes:

Responsibilities: Respect for Human Dignity
Skills: Oral Communication
Knowledge: Civic, Cultural, and International Environments

English 411FX. Language, Literature, and Leadership: Advanced Writing & Speaking for French Language Exchange Cadets. 3(1). Building on English 111 and English 211, this capstone course focuses on the moral and intellectual aspects of war as expressed in the literature of our profession: biographical, autobiographical, and fictional accounts, along with the oratory of prominent public figures in times of national crisis. Rigorous written and oral assignments give cadets the opportunity to reflect on the inviolable bond that unites successful command with its moral, intellectual, and emotional foundations. This course is designed for participants in the exchange programs in France and Canada. Texts in the course are from major canonical works of fiction, memoir, and oratory that address the concreteness and complexity of war as well as the ethical issues of leadership, as well as the language of diplomacy and international relations. Prereq: English 211 or Hum 200; selection for one of the two French language exchange programs. Sem hrs: 3 summer.

In addition, this course/program is a primary contributor to the development and assessment of the following USAFA outcomes:

Responsibilities: Respect for Human Dignity
Skills: Oral Communication
Knowledge: Civic, Cultural, and International Environments

English 465. Television News: Production and Performance. 3(2). Examines and uses the fundamentals of television production including: directing, writing, and operating the various pieces of equipment necessary for producing television programs. Students produce, write, direct, and perform in the weekly "Blue Tube" program broadcast via closed-circuit television to the Academy community. Lab work stresses understanding basic television production fundamentals, public speaking skills, and how to use the electronic technology to communicate to a mass audience. Additionally, students will hone critical analysis skills by completing a 4-6 page paper examining their motivation for entering the profession of arms. Final paper. Prereq: C3C standing and Course Director approval. With DFENG Department Head approval, English 465 is a core substitute for English 411 to students who earn a B avg in English 111 and English 211 or ≥ B in English 211 if they validated/transferred English 111. Sem hrs: 3 fall or spring.

English 474. Speech Communication: Theory and Practice. 3(l). Considers selected topics in advanced speech communication through informative and persuasive speaking. Frequent speaking assignments. Prereq: English 211. Sem hrs: 3 fall or spring.

English 484. Literature of War. 3(1). From time immemorial, war and art have reflected on another. Is is the goal of this course to illuminate that intersection. Several genres may be studied: fiction, memoir, poetry, film, journalism, documentaries, speeches delivered by leaders in times of national crises, etc. English 484 is a core substitute for English 411 for English majors. Final paper. Prereq: English 211, English 341, or Hum 200. Sem hrs: 3 fall or spring.

English 490. Senior English Seminar. 3(l). An intensive seminar covering a literary period, literary genre, or major author. Representative examples are "Coleridge and His Contemporaries," "The Victorian Age," and "American Literature Between the World Wars." Examples of literary genre include satire, short story novel, lyric poem, and drama. Representative examples of major authors are Milton, Chaucer, Hawthorne, Hemingway, Hurston, and O'Brien. Final paper. Prereq: English 34l and C1C standing or approval of Department Head. Sem hrs: 3 fall or spring.

English 495. Special topics. 3(1). Selected topics in English. Previous topics have included "The Short Story," "Studies in the Gothic," "New Journalism," "The Theatre of the Absurd," and "Travel Writing and the Modern Imagination." Final exam or final paper. Prereq: English 111. Sem hrs: 3 fall or spring.

English 499. Independent Study. 3(0). Study and research in literature, composition, or creative writing for students who have demonstrated their ability for advanced study in regularly offered enrichment courses and for whom an appropriate enrichment course does not exist. Topics and meetings arranged with the instructor. Final report. Prereq: Department approval. Sem hrs: 3 fall or spring.

- English 499A. Independent Study. 2(0). Sem hrs: 2 fall or spring.
- English 499B. Independent Study. 1.5(0). Sem hrs: 1.5 fall or spring.
- English 499C. Independent Study. 1(0). Sem hrs: 1 fall or spring.

<u>FINE ARTS</u> (Fine Art)
Offered by the Department of English and Fine Arts (DFENG)

Fine Art 352. Art in History. 3(1). A selected survey of world art from antiquity to the present. Includes study of the major periods, schools, and styles of art, as well as biographies of important artists. Students will apply various methods of studying major masterpieces across time, geography, and cultures. Final project or final exam. Prereq: None. Sem hrs: 3 spring.

Fine Art 358. Music Appreciation. 3(1). Survey of music in the Western world and a study of basic elements, forms, and styles in representative works by major composers. Emphasis on listening, understanding, and appreciation. Knowledge or talent in music is not required. Final exam or final project. Prereq: None. Sem hrs: 3 fall or spring.

Fine Art 359. Introduction to Drawing and Design. 3(1). This course is the first for students with no practical art experience such as previous high school drawing experience, private lessons, or keeping a sketchbook. Students with this experience level could consider enrolling in Fine Art 464, Painting and Printmaking, offered spring semesters. Students who need help assessing their skill level should obtain instructor guidance prior to enrolling in the course. Course assignments include hands-on class exercises that teach students to apply the principles of design to common design and drawing tasks. Students will gain practical experience in sketching still life, landscape, and figurative subjects as well as imaginative and creative drawings of their own choice. Students are expected to devote time outside of class practicing skills learned during class time. Final project or final exam. Prereq: None. Sem hrs: 3 fall.

Fine Art 375. Introduction to Film Studies. 3(1). A structured introduction to cinema and/or cinema history. Course will take a thematic or chronological approach to the study of film as an art form, with attention to developing an understanding of film grammar, terminology, narration, forms of genre, and modes of production. This course will also include a critical component introducing students to many of the central theoretical ideas about cinema that have dominated the field of film studies since the 1950s. Each film is viewed outside of class before it is discussed. Final paper or final project. Prereq: English 211. Sem hrs: 3 fall or spring.

Fine Art 461. Advanced Projects in Art. 3(1). This course is intended for students who have basic skills in drawing or painting and are ready to pursue more challenging projects. Students have already studied basic drawing or painting, either in high school courses or private lessons or who have maintained a sketchbook and feel comfortable with basic drawing of still life, landscape, and figurative subjects may also enroll. Students will plan and execute more complex projects in drawing or painting using a variety of media, techniques, styles, and approaches. Students will plan individual projects and are expected to spend time outside of class to finish them. Final project. Prereq: Fine Art 359 or Fine Art 464 or previous drawing or painting skills and course director or Department Head approval. Sem hrs: 3 fall.

Fine Art 464. Painting and Printmaking. 3(1). A course in painting with acrylics and watercolor media. Beginners are welcome but must be confident with basic drawing skills for still life, landscape, and figurative subjects. Students plan several paintings of their own design and also projects designed to demonstrate a variety of techniques, approaches, and styles in art. Students also complete several printmaking projects. Because the course is production-driven, students must expect to spend time outside of class—at least one hour for every hour spent in class. Students are expected to be challenged commensurate with their specific skills and abilities; every class period allows for individual instruction and guidance for success. Final project. Prereq: Fine Art 359 (Final "B" or above grade) or previous drawing experience and course director or Department Head approval. Sem hrs: 3 spring.

Fine Art 495. Special Topics. 3(1). Selected special topics in Fine Art. Final exam or final report. Sem hrs: 3 fall or spring.

Fine Art 499. Independent Study. 3(0). Independent study in art or music. Subject and

meetings arranged with the instructor. Prereq: For visual art, one of the visual arts courses and department approval; for music, Fine Art 358 and instructor approval. Sem hrs: 3 fall or spring.

- Fine Art 499A. Independent Study. 2(0). Sem hrs: 2 fall or spring.
- Fine Art 499B. Independent Study. 1.5(0). Sem hrs: 1.5 fall or spring.
- Fine Art 499C. Independent Study. 1(0). Sem hrs: 1 fall or spring.

FIRST-YEAR EXPERIENCE (FYE)
Administered by the Dean of the Faculty (DFR)

First-Year Experience 101 (FYE 101). 0(1x). First-Year Experience (FYE) is a one semester hour course spanning the two semesters of a cadet's fourth-degree year. Designed to develop cadets' personal accountability and self-awareness, the purpose of FYE is to accelerate the development of habits of mind needed to succeed in a college environment. The FYE program focuses on building a strong understanding of academic expectations through exposure to and integration of the USAFA Learning Outcomes. Key topics covered in FYE include engaged learning, Academy expectations, time management, learning style assessment, critical thinking, decision making, effective communication, and a passion for lifelong learning. Prereq: None. Sem hrs: 0 fall.

First-Year Experience 102 (FYE 102). 1(1x). Continuation of First-Year Experience 101 from the fall semester. Prereq: FYE 101. Sem hrs: 1 spring.

FOREIGN AREA STUDIES (For Ar Stu)
Offered by the Department of Economics and Geosciences (DFEG), the Department of Foreign Languages (DFF), the Department of History (DFH), and the Department of Political Sciences (DFPS)

For Ar Stu 400/401. Cadet Summer Language Immersion Program (CSLIP). 3(1). Intensive foreign language and culture study at an accredited foreign university or language institute. Pass/Fail. Cadets must take a language specific assessment prior to departure and within sixty days after program completion. A Photo Journal describing the trip must be submitted to the escort officer within 30 days of completion of travel. This course counts toward the Foreign Language minor. For Ar Stu 401 applies to cadets who participate in a second CSLIP. Prereq: For Lang 322, equivalent advanced placement, or completion of For Lang 222 for Arabic, Chinese, Japanese, and Russian; Foreign Area Studies Steering Group (inter-departmental) approval. Sem hrs: 3 summer.

For Ar Stu 410. Model Arab League (MAL). 3(1). Inter-departmental, inter-disciplinary seminar on contemporary issues on the Middle East, preparing Foreign Area Studies majors for regional or national-level competitions of the MAL. Specialists from various departments introduce historical, geographical, political, socio-economic, cultural, linguistic and literary factors to enhance understanding of a specific region or nation of the Middle East. In addition, enrollees will learn parliamentary and forensic procedures. Portions of the course may be taught in Arabic. Final project or paper. Prereq: C1C or C2C standing, course director's approval. Sem hrs: 3 spring.

For Ar Stu 415. Advanced Model Arab League (AMAL). 3(1). Advanced Inter-departmental, inter-disciplinary seminar on contemporary issues on the Middle East, preparing students for regional or national-level competitions of the MAL. Specialists from various departments introduce historical, geographical, political, socio-economic, linguistic and literary factors to enhance understanding of a specific region or nation of the Middle East. In addition, enrollees serve as class leaders and mentors for students of ForArStu 410, Basic Model Arab League. Enrollees of ForArStu 415 will serve as focal points during the drafting and presentation of point papers and resolutions during the model competitions. Final paper. Prereq: C1C standing, successful completion of ForArStu 410, and course director approval. Sem hrs: 3 spring.

For Ar Stu 420. Model Organization of American States (MOAS). 3(1). Inter-departmental, inter-disciplinary seminar on contemporary issues in Latin America, preparing Foreign Area Studies majors for regional or national-level competitions of the MOAS. Specialists from various departments introduce historical, geographical, political, socio-economic, cultural, linguistic and literary factors to enhance understanding of a specific region or country in Latin America. In addition, enrollees will learn parliamentary and forensic procedures. Portions of the course may be taught in Spanish. Final project or paper. Prereq: C1C or C2C standing, course director's approval. Sem hrs: 3 spring.

For Ar Stu 425. Advanced Model Organization of American States (AMOAS). 3(1). Advanced inter-departmental, inter-disciplinary seminar on contemporary issues on Latin America, preparing students for regional or national-level competitions of the MOAS. Specialists from various departments introduce historical, geographical, political, socio-economic, linguistic and literary factors to enhance understanding of a specific region or nation of Latin America. In addition, enrollees will serve as class leaders and mentors for first-time students of For Ar Stu 420, Basic Model Organization of American States. Enrollees of For Ar Stu 425 will serve as focal points during the drafting and presentation of point papers and resolutions during the model competitions. Final paper. Prereq: C1C standing, successful completion of For Ar Stu 420, course director's approval. Sem hrs: 3 spring.

For Ar Stu 430. Model African Union (MAU). 3(1). Inter-departmental, inter-disciplinary seminar on contemporary issues in Africa, preparing Foreign Area Studies majors for regional or national-level competitions of the MOAU. Specialists from various departments introduce historical, geographical, political, socio-economic, cultural, linguistic and literary factors to enhance understanding of a specific region or country in Africa. In addition, enrollees will learn parliamentary and forensic procedures. Final project or paper. Prereq: C1C or C2C standing, course director's approval. Sem hrs: 3 spring.

For Ar Stu 435. Advanced Model African Union (AMAU). 3(1). Advanced Inter-departmental, inter-disciplinary seminar on contemporary issues on Africa, preparing students for regional or national-level competitions of the MOAU. Specialists from various departments introduce historical, geographical, political, socio-economic, linguistic and literary factors to enhance understanding of a specific region or nation of Africa. In addition, enrollees will serve as class leaders and mentors for first-time students of For Ar Stu 430, Basic Model Organization of African Unity. Enrollees of For Ar Stu 435 will serve as focal points during the drafting and presentation of point papers and resolutions during the model competitions. Final paper. Prereq:

C1C standing, successful completion of For Ar Stu 430, course director's approval. Sem hrs: 3 spring.

For Ar Stu 440. Model European Organizations. 3(1) Interdepartmental, interdisciplinary seminar on contemporary issues in Europe. This course prepares cadets for regional or national-level competitions of the Model NATO and/or Model EU. Specialists from various departments introduce historical, geographical, political, socio-economic, cultural, and civil-military factors to enhance understanding of a specific country or countries in Western Europe. In addition, enrollees will learn parliamentary and forensic procedures. Final Exam, Project, or Paper. Prereq: C1C or C2C standing, course director's approval. Sem hrs: 3 fall or spring.

For Ar Stu 445. Advanced Model North Atlantic Treaty Organization (AMNATO). 3(1). Advanced Inter-departmental, inter-disciplinary seminar on contemporary North American and West European issues, preparing students for regional or national-level competitions of the MNATO. Specialists from various departments introduce historical, geographical, political, socio-economic, linguistic and literary factors to enhance understanding of a specific region or nation of Europe. In addition, enrollees will serve as class leaders and mentors for first-time students of For Ar Stu 440, Basic Model North Atlantic Treaty Organization. Enrollees of For Ar Stu 445 will serve as focal points during the drafting and presentation of point papers and resolutions during the model competitions. Final paper. Prereq: C1C standing, successful completion of For Ar Stu 440, course director's approval. Sem hrs: 3 spring.

For Ar Stu 470. France in the 20th Century. 3(1). Inter-disciplinary course taught primarily in French, designed to give For Ar Stu majors with a focus on West European and French language studies a better understanding of 20th century France. It will combine expertise from the Foreign Language, Political Science, Geospatial Science, and History departments to present major factors in the history, politics, and culture of modern France and its unique position in the current international system. Final exam. Prereq: French 321. Sem hrs: 3 spring.

For Ar Stu 491. Culture and the Military Profession. 3(1). This course presents an overview of the study of cultural concepts, methodologies, and applications pursuant to the roles and missions of the military profession. It addresses culture on multiple levels and across disciplinary boundaries – drawing on the knowledge, literature, and practices of several informed perspectives. The course includes discussion of the heritage of the US military's application of cultural and ethnographic knowledge; outlines contemporary models for cultural observation, analysis and conclusion; presents theoretical foundations for the various levels of cultural learning (general-, regional-, and specific-culture); applies concepts of cultural study within various case studies and discussion examples; and outlines relevant methodologies drawn from several traditional academic disciplines in the areas of cultural geography, cross-cultural study as a unique interdisciplinary construct with strong application to the US military profession across a broad spectrum of operations and activities. Final exam. Sem hrs: 3 fall or spring.

For Ar Stu 495. Special Topics in Foreign Area Studies. 3(1). Interdisciplinary course for Foreign Area Studies majors. (The following suffixes indicating geo-cultural region of course specialization apply: "A" for Asia, "E" for Eastern Europe, "F" for Africa, "L" for Latin America, "M" for the Middle East, "S" for Russia or Slavic regions, and "W" for Western

Europe.). Cultural, literary, linguistic, historical, political, social, economic, geographical, and other pertinent factors bearing on an understanding of the particular region involved are treated by specialists from relevant departments. Portions of the course may be taught in the relevant foreign language. Final paper or final exam. Prereq: C1C or C2C standing, course director's approval. Sem hrs: 3 fall or spring.

FOREIGN LANGUAGES (For Lang)
Offered by the Department of Foreign Languages (DFF)

Supplemental Information:
All cadets who have a background in one of the foreign languages offered at the Academy will be administered a placement examination. Prospective cadets will take the German and Spanish exams on-line prior to arrival at USAFA. Cadets testing in other languages will take their test upon arrival at the Academy. Based on the results of their examination, cadets will be placed into an appropriate course and level.

Foreign Language Placement:
Cadets without prior language background and cadets who score low on a placement examination will be placed into For Lang 131 (Basic Sequence), normally in the language of their choice. Cadets with one or two years of previous study of the language will normally be placed into For Lang 141 (Accelerated Basic Sequence); all 100-level foreign language courses (131, 132, 141, 142) will meet every day. Cadets who place into the 200-level or higher will retroactively receive validation credit for For Lang 131-132 after completing four foreign language course in one language.

Language	**Typical Course Sequence**						
		Fall	Spring	Fall	Spring	Fall	Spring
Arabic		131	132	221	222	321	322
Chinese		131	132	221	222	321	322
French		131	132	221	222	321	322
German		131	132	221	222	321	322
Japanese		131	132	221	222	321	322
Portuguese		131	132	221	222	321	322
Portuguese		151	152	321	322		
Russian		131	132	221	222	321	322
Spanish		131	132	221	222	321	322

For Lang 131-132. (Basic Sequence). 3-3(2'-2').

Arabic 131-132	Basic Arabic	(Fall – Spring)
Chinese 131-132	Basic Chinese	(Fall – Spring)
French 131-132	Basic French	(Fall – Spring)
German 131-132	Basic German	(Fall – Spring)
Japanese 131-132	Basic Japanese	(Fall – Spring)
Portuguese 131-132	Basic Portuguese	(Fall – Spring)
Russian 131-132	Basic Russian	(Fall – Spring)
Spanish 131-132	Basic Spanish	(Fall – Spring)

Basic foreign language study. Introduction to the Language, Culture, and Civilization. Language Learning Center (LLC) supplements classroom instruction. Students are placed in the course on the basis of no prior language background or low placement examination scores. Final exam both semesters. Must be taken sequentially. Sem hrs: For Lang 131 - 3 fall; For Lang 132 - 3 spring. Cadets who successfully complete For Lang 132 will enroll next in For Lang 221.

In addition, this course/program is a primary contributor to the development and assessment of the following USAFA outcomes:

Responsibilities:	*Intercultural Competencies, Lifelong Development and Contributions, Respect for Human Dignity*
Skills:	*Oral Communication, Written Communication, Information Literacy, Critical Thinking, Decision Making*
Knowledge:	*Civic, Cultural, and International Environments*

Portuguese 151. Accelerated Basic Portuguese I. 3(2'). Introduction to the language, culture and civilization. Language Learning Center (LLC) supplements classroom instruction. Students are placed into the course on the basis of prior Spanish language background—level to be determined by the Department of Foreign Languages. Cadets who successfully complete Portuguese 151 will enroll next in Portuguese 152. Final exam. Sem hrs: 3 fall.

Portuguese 152. Accelerated Basic Portuguese II. 3(2'). Refinement of communication in the target language. Intensification of aural and reading comprehension. Student presentations and classroom discussions based on readings/topics in culture and civilization of Portuguese. Language Learning Center may supplement classroom instruction. Cadets who successfully complete Portuguese 152 will likely enroll into Portuguese 321 allowing them to bypass Portuguese 221/222. Final Exam. Prereq: Successful completion of Portuguese 151 or placement into this level by DFF. Sem hrs: 3 spring.

For Lang 221. 3(1).

Arabic 221	Intermediate Arabic I	(Fall)
Chinese 221	Intermediate Chinese I	(Fall)
French 221	Intermediate French I	(Fall)
German 221	Intermediate German I	(Fall)
Japanese 221	Intermediate Japanese I	(Fall)
Portuguese 221	Intermediate Portuguese I	(Fall)
Russian 221	Intermediate Russian I	(Fall)
Spanish 221	Intermediate Spanish I	(Fall)

Refinement of communication in the target language. Intensification of aural and reading comprehension. Student presentations and classroom discussions based on selected readings/topics in culture and civilization of language studied. Language Learning Center may supplement classroom instruction. Final exam. Prereq: Normally for students who have taken For Lang 131-132, or placement into this level by DFF. Sem hrs: 3 fall.

For Lang 222. 3(1).

Arabic 222	Intermediate Arabic II	(Spring)
Chinese 222	Intermediate Chinese II	(Spring)

French 222	Intermediate French II	(Spring)
German 222	Intermediate German II	(Spring)
Japanese 222	Intermediate Japanese II	(Spring)
Portuguese 222	Intermediate Portuguese II	(Spring)
Russian 222	Intermediate Russian II	(Spring)
Spanish 222	Intermediate Spanish II	(Spring)

Continued refinement of target language. Emphasis on conversational practice and aural comprehension of contemporary spoken language. Student presentations and classroom discussions based on culture and civilization readings/topics in target language. Language Learning Center may supplement classroom instruction. Final exam. Prereq: Successful completion of For Lang 221 or placement into this level by DFF. Sem hrs: 3 spring.

For Lang 321. 3(1).

Arabic 321	Advanced Arabic I	(Fall)
Chinese 321	Advanced Chinese I	(Fall)
French 321	Advanced French I	(Fall)
German 321	Advanced German I	(Fall)
Japanese 321	Advanced Japanese I	(Fall)
Portuguese 321	Advanced Portuguese I	(Fall)
Russian 321	Advanced Russian I	(Fall)
Spanish 321	Advanced Spanish I	(Fall)

A capstone communication course designed to enhance the students' ability in the language and culture. Final exam. Prereq: For Lang 222 or placement into this level by DFF. Sem hrs: 3 fall.

For Lang 322. 3(1).

Arabic 322	Advanced Arabic II	(Spring)
Chinese 322	Advanced Chinese II	(Spring)
French 322	Advanced French II	(Spring)
German 322	Advanced German II	(Spring)
Japanese 322	Advanced Japanese II	(Spring)
Portuguese 322	Advanced Portuguese II	(Spring)
Russian 322	Advanced Russian II	(Spring)
Spanish 322	Advanced Spanish II	(Spring)

A follow-on capstone communication course to For Lang 321 designed to further hone the students' ability in the language and culture. Final exam. Prereq: For Lang 321 or placement into this level by DFF. Sem hrs: 3 spring.

For Lang 365. 3(1).

Arabic 365	Arabic Civilization and Culture	(Fall of odd-numbered years)
Chinese 365	Chinese Civilization and Culture	(Fall of odd-numbered years)
French 365	French Civilization and Culture	(Fall of even-numbered years)
German 365	German Civilization and Culture	(Fall)
Japanese 365	Japanese Civilization and Culture	(Fall)
Portuguese 365	Portuguese Civilization and Culture	(Fall)
Russian 365	Russian Civilization and Culture	(Fall)

Spanish 365 Spanish Civilization and Culture (Fall or spring)

Oral discussion of civilization, culture, and contemporary issues (military, political, economic) of the country or countries concerned. Discussion is in the target language and is based on selected readings in that language. Final exam, project, or paper. Prereq: Successful completion of For Lang 322 or department approval. Sem hrs: 3.

German 370. Three Hundred Years of German Immigration to America. 3(1). More than seven million Germans have come to our shores through the centuries, and today some 60 million Americans – one in four – trace their heritage back to German ancestry. This course investigates the reasons why they came and where they settled; and how they were able to endure tremendous hardship only to succeed. Last but not least, we will study the economic, social, scientific, cultural, and political contributions that these immigrants have made to the growth and success of the United States of America. All activities are conducted in German. Final exam, project, or paper. Prereq: German 322 or placement into this level by DFF. Sem hrs: 3 fall.

Spanish 365. Oral discussion of civilization, culture, and contemporary issues (military, political, economic) of the country or countries concerned. Discussion is in the target language and is based on selected readings in that language. Final exam, project, or paper. Prereq: Successful completion of Spanish 322 or department approval. This course is a prerequisite for subsequent language courses unless waived by the department. Sem hrs: 3 fall or spring.

Spanish 371. Current Events in the Spanish-Speaking World. 3(1). Cadets will experience a semester-long survey of significant current events in the Spanish-speaking world. They will study and research the cultural, political, economic and historic factors that affect current reality. The course uses available press, television, radio broadcasts and other means such as the World Wide Web to carry out its objectives. Most of the activities of this course are in seminar format, and emphasis is placed in oral discussions and written production. All the activities in the class are conducted in Spanish. Final exam, project, or paper. Prereq: Spanish 365 or placement into this level by DFF. Sem hrs: 3 fall or spring.

French 372. Francophone Cultures. 3(1). Course taught in French on the Francophone movement and the cultures of selected French-speaking countries/regions other than France. In combination with faculty presentations and guidance, cadets will cooperatively research and discuss various French-speaking countries. Francophone Africa will figure prominently. Focus will be on French influence over the historical, political, and cultural aspects of those countries and the status of that influence today in relation to other regional and global systems. Final exam, project, or paper. Prereq: French 322 or placement into this level by DFF. Sem hrs: 3 fall of odd-numbered years.

Japanese 372. Japanese Society and Culture. 3(1). The purpose of this course is to gain a basic knowledge of Japanese society and culture with particular attention to the areas of governmental organization, diplomatic relations, national defense policy and the constitution. Discussion are conducted in Japanese and based on selected readings in Japanese and/or English. Students learn about Japanese government and its constitution. Students compare what they have learned in other Japanese courses, as well as in courses covering the history, politics, and law of other

cultures, in order to gain a better understanding of human civilization as a whole. The class will be team taught with an exchange officer from the Japan Air Self Defense Force. All activities are conducted in Japanese. Final exam, project, or paper. Prereq: Japanese 322 or placement into this level. Sem hrs 3 spring of odd-numbered years.

For Lang 376. 3(1).

Arabic 376	Introduction to Literature	(Spring of even-numbered years)
Chinese 376	Introduction to Literature	(Spring of even-numbered years)
French 376	Introduction to Literature	(Spring as needed)
German 376	Introduction to Literature	(Spring as needed)
Japanese 376	Introduction to Literature	(Fall of odd-numbered years)
Portuguese 376	Introduction to Literature	(Spring)
Russian 376	Introduction to Literature	(Spring as needed)
Spanish 376	Introduction to Literature	(Fall)

Survey of important writers, their works, and influences on their societies. Students are provided cultural insights through literature. Discussions are conducted in the target language and based on selected literary works ranging from early times to contemporary periods. Final exam, project or paper. Prereq: For Lang 322 and (Spanish 365 for Spansih 376). Sem hrs: 3.

Spanish 377. Introduction to Latin American Literature. 3(1). Primary focus is a survey of important Latin American writers, their works, and influences on their societies. Students are provided cultural insights through literature. Discussions are conducted in the target language and based on selected literary works ranging from early times to contemporary periods. All classes will be conducted in the target language. All assignments will be conducted in the target language. Final exam, project, or paper. Prereq: Spanish 365. Sem hrs: 3 spring.

For Lang 491. 3(1).

Arabic 491	Arabic Advanced Readings	(Fall of even-numbered years)
Chinese 491	Chinese Advanced Readings	(Fall of even-numbered years)
French 491	French Advanced Readings	(Fall as needed)
German 491	German Advanced Readings	(Fall)
Japanese 491	Japanese Advanced Readings	(Spring of odd-numbered years)
Portuguese 491	Portuguese Advanced Readings	(Spring)
Russian 491	Russian Advanced Readings	(Fall of even-numbered years)
Spanish 491	Spanish Advanced Readings	(Spring)

Language program with primary emphasis on the development of advanced foreign language reading skills via a variety of media. All classes will be conducted in the target language. All assignments will be completed in the target language. Final exam, project, or paper. Prereq: For Lang 322 and (Spanish 465 for Spanish 491). Sem hrs: 3.

Chinese 492. Culture and Knowledge of the Chinese Military. 3(1). Provides an introduction to the Chinese People's Liberation Army and its military service components. Students will be introduced to contemporary military vocabulary and terminology from the Army, Navy, and Air Force, with an emphasis on the Air Force. Students will also learn to identify uniforms and recognize Chinese rank structure, as well as gain a basic understanding of Chinese aircraft, military organizations, and military structure. Discussion topics include the role of women in the

Chinese military, an introduction to Chinese military service academies, military law and discipline, and qualifications for Chinese military service. This course describes China's politico-military structure and will examine China's philosophy and approach to ancient and contemporary warfare. The course will be taught entirely in Chinese, and course materials will be derived from authentic newspapers, magazines, and other texts, as well as from audio and video clips. Final exam and/or final project. Prereq: Chinese 322 or equivalent. Sem hrs: 3 spring of odd-numbered years.

French 492. French AFA Preparation. 1(0). Language program emphasizing the development of specific/required language skills and an examination of current cultural, military, and political issues. All classes conducted in French. Pass/fail. Final exam. Prereq: French 322 or placement into 300-level and approval by the Superintendent for participation in the French Air Force Academy or Canadian Royal Military Academy Exchange Programs. Sem hrs: 1 spring.

German 492. German AFA Preparation. 1(0). Language program with primary emphasis on the development of specific/required language skills and an examination of current cultural, military, and political issues. All classes will be conducted in the target language. All assignments will be completed in the target language. Pass/fail. Prereq: German 322 or placement into 300-level and approval by the Superintendent for participation in the German Air Force Academy Exchange Program. Sem hrs: 1 spring.

Japanese 492. Japanese AFA Preparation. 1(0). Language program with primary emphasis on the development of specific/required language skills and an examination of current cultural, military, and political issues. All classes will be conducted in the target language. All assignments will be completed in the target language. Pass/fail. Prereq: Japanese 322 or placement into 300-level and approval by the Superintendent for participation in the Japanese Air Force Academy Exchange Program. Sem hrs: 1 (not currently offered).

Spanish 492A. Spanish AFA Preparation. 1(0). Language program with primary emphasis on the development of specific/required language skills and an examination of current cultural, military, and political issues. All classes will be conducted in the target language. All assignments will be completed in the target language. Pass/fail. Prereq: Spanish 365 or placement into 300-level and approval by the Superintendent for participation in the Spanish Air Force Academy Exchange Program. Sem hrs: 1 spring.

Spanish 492B. Chilean AFA Preparation. 1(0). Language program with primary emphasis on the development of specific/required language skills and an examination of current cultural, military, and political issues. All classes will be conducted in the target language. All assignments will be completed in the target language. Pass/fail. Prereq: Spanish 365 or placement into 300-level and approval by the Superintendent for participation in the Chilean Air Force Academy Exchange Program. Sem hrs: 1 spring.

For Lang 495. Special Topics. 1-3(1). Selected topics in foreign languages. Final exam, project, or paper. Prereq: Department approval. Sem hrs and offering time determined by Division Chief. Sem hrs: 1-3.

For Lang 499. Independent Study. 3(0). Individual study or research conducted on a tutorial basis. Study may be in any of the seven languages offered by the department. Topic or area of study/research must be approved by the department head. Final exam project, or term paper. Prereq: DFF approval. Sem hrs: 3 fall or spring.

- For Lang 499A. Independent Study. 2(0). Sem hrs: 2 fall or spring.
- For Lang 499B. Independent Study. 1.5(0). Sem hrs: 1.5 fall or spring.
- For Lang 499C. Independent Study. 1(0). Sem hrs: 1 fall or spring.

GEOSPATIAL SCIENCE (Geo)
Offered by the Department of Economics and Geosciences (DFEG)

Geo 250. Human Geography: A Global Cultural Awareness. 3(1). This course will introduce students to major ideas, concepts, institutions, and events that shape human cultures and societies. Cadets will develop an understanding of the complex relationship between humans and the environment through the study of human movement, language, religion, race, economic activities, and urban development. A major objective of the course is for cadets to be able to compare and appreciate global cultures in a spatial context. To help cadets achieve this cultural understanding the course uses a comparative approach to the study of global cultures focusing on religions, languages, traditions, ways of life and perceptions. Each cadet should develop a strong appreciation and comprehension of the never-ending and dynamic processes that are continually shaping the Earth, its peoples, and their cultures. Final exam. Prereq: None. Sem hrs: 3 spring.

Geo 310. Geospatial Information Analysis. 3(1). This course prepares cadets with the basic tools necessary to make decisions with geographic (geospatial) information. The course introduces data sources and collection techniques (e.g. use of remote sensing and GPS). Cadets will learn methods to transform data into geospatial intelligence appropriate for decision making. Military and civilian applications of Geographic Information Systems (GIS) technology are examined in case studies, and cadets will complete projects to demonstrate the ability to solve an ill-defined spatial problem and make recommendations to a decision maker. Final exam or final project. Prereq: Physics 215. Sem hrs: 3 fall or spring.

Geo 351. Introduction to Physical Geography. 3(1). The study of the Earth System (atmosphere, hydrosphere, biosphere, and lithosphere). Focuses on the spatial distributions within the system, the use of maps to explain the distributions, origins and processes shaping the Earth's surface, and the influence of humans on the Earth system. Final exam or final research project. Prereq: None. Sem hrs: 3 fall.

Geo 353. Geomorphology. 3(1). An analysis of the dynamic processes, distribution, and structure of the Earth's physical features. Focuses on fundamental concepts of physical geology, climate, soils, and vegetation. Final exam or final project. Prereq: Geo 351. Sem hrs: 3 spring of odd-numbered years.

Geo 355. Field Experience in the Geosciences. 3(1). This course provides the opportunity for advanced learning in a specific aspect of the Geosciences. Cadets apply prerequisite knowledge to a field-based, practical problem. The course is a combination of classroom instruction and problem design with extensive field experiences addressing the problem. Topics and study sites

are variable and determined by the course director. Final exam. Prereq: Geo 250, Geo 310, and Geo 351; or course director approval. Sem hrs: 3 summer.

Geo 370. Military Geography. 3(1). Analysis of the significant influence geography exerts on military operations, war, and national security. Examines how the physical, cultural, political, and economic dimensions of geography and meteorology affect the planning and execution of today's military operations. Final exam or final research project. Prereq: Geo 250 or Geo 351. Sem hrs: 3 fall.

Geo 382. Remote Sensing and Imagery Analysis. 3(1). Mechanisms for exploiting the electromagnetic radiation spectrum are investigated using particle and wave theory equations. Digital image processing techniques are presented and applied using the Applied Geography Laboratory facilities and raster data from commercial spaceborne sensing systems. Final exam or final project. Prereq: Physics 215. Sem hrs: 3 fall.

Geo 410. Advanced Geospatial Analysis. 3(1). This course equips students with advanced analytical skills to understand and resolve complex geospatial problems. Discussion and projects will integrate advanced geospatial analysis techniques with real world data to address problems similar to those officers may encounter in the operational Air Force. Building on knowledge and expertise learned in Geospatial Information Analysis (Geo 310), students will integrate theoretical geoscience concepts with data analysis and information-extraction techniques. Final exam or final project. Prereq: Geo 310. Sem hrs: 3 fall.

Geo 470. Geography of Europe and Russia. 3(1). This course is designed to provide a geographical analysis of the diverse regional-cultural landscapes of Europe, Russia, and Central Asia. This is an advanced human geography course focusing on the complex human interaction with the physical environment. Special attention will be paid to the formation and current status of the entire European cultural area to improve cadet understanding and cultural awareness of topical analysis regarding demography, language, religion, economics, geopolitics, and relations with the rest of the world, to include the United States. Final exam or final project. Prereq: None. Sem hrs: 3 spring of odd-numbered years.

Geo 471. Geography of the Americas. 3(1). This course is designed to provide a geographical analysis of the diverse regional-cultural landscapes of North America, South America, and Caribbean regions. This is an advanced human geography course focusing on the complex human interaction with the physical environment. Special attention will be paid to the formation and current status of the entire regional-cultural area to improve cadet understanding and cultural awareness of topical analysis regarding demography, language, religion, economics, geopolitics, and relations with the rest of the world, to include the United States. Final exam or final project. Prereq: None. Sem hrs: 3 fall of odd-numbered years.

Geo 475. Geography of Asia. 3(1). This course is designed to provide a geographical analysis of the diverse regional-cultural landscapes of East Asia, Southeast Asia, and the South Asia regions. This is an advanced human geography course focusing on the complex human interaction with the physical environment. Special attention will be paid to the formation and current status of the entire regional-cultural area to improve cadet understanding and cultural

awareness of topical analysis regarding demography, language, religion, economics, geopolitics, and relations with the rest of the world, to include the United States. Final exam or final project. Prereq: None. Sem hrs: 3 fall of even-numbered years.

Geo 480. Geography of the Middle East and Africa. 3(1). This course is designed to provide a geographical analysis of the diverse regional-cultural landscapes of the Middle East and African regions. This is an advanced human geography course focusing on the complex human interaction with the physical environment. Special attention will be paid to the formation and current status of the entire regional-cultural area to improve cadet understanding and cultural awareness of topical analysis regarding demography, language, religion, economics, geopolitics, and relations with the rest of the world, to include the United States. Final exam or final project. Prereq: None. Sem hrs: 3 spring of even-numbered years.

Geo 482. Advanced Remote Sensing. 3(1). Students will explore advanced analysis techniques for extracting information from satellite imagery. Imagery of various spatial and spectral scales will be used, including thermal-infrared and radar imagery. The goal of this course is to provide students with experience in tackling geospatial problems with remote sensing data—from development of the questions, to identification of the necessary data, and finally selection and execution of appropriate analysis techniques. The course will include several case studies. Final project. Prereq: Geo 382. Sem hrs: 3 spring.

Geo 495. Special Topics. 3(1). Selected topics in geospatial science. Final project, final exam, or research paper. Prereq: None. Sem hrs: 3 fall or spring.

Geo 498. Capstone in Geospatial Science. 3(1). The course is designed to assess the student's ability to integrate and synthesize geoscience knowledge, analytical techniques, and research methods using geospatial research tools. This culminating experience will include service-based projects and/or research case studies on topics related to Geospatial Intelligence (GEOINT), human geography, physical geography, and/or regional geography. Final project. Prereq: Geo 250, Geo 310, and Geo 351; or course director approval. Sem hrs: 3 spring.

Geo 499. Independent Study. 3(0). Independent research under the direction of a faculty member. Research paper or final project. Prereq: Department approval. Sem hrs: 3 fall or spring.

- Geo 499A. Independent Study. 2(0). Sem hrs: 2 fall or spring.
- Geo 499B. Independent Study. 1.5(0). Sem hrs: 1.5 fall or spring.
- Geo 499C. Independent Study. 1(0). Sem hrs: 1 fall or spring.

HISTORY (History)
Offered by the Department of History (DFH)

History 100. Introduction to Military History. 3(1). Survey of the history of Western warfare from the age of gunpowder to the present. Concentrates on the evolving methods and theories of warfare in Europe and the United States. Emphasizes how political, social, economic, and technological factors have combined to shape various changes and continuities in the nature of Western warfare. Written assignments. Final exam. Prereq: None. Sem hrs: 3 fall or spring.

In addition, this course/program is a primary contributor to the development and assessment of the following USAFA outcomes:

Responsibilities: *Intercultural Competence*
Skills: *Written Communication*
Knowledge: *Heritage and Application of Air, Space, and Cyberspace Power; National Security & Full Spectrum of Joint & Coalition Warfare*

History 230. Historiography and Methodology. 3(1). A history practicum that is the "how to" course for history majors. The course begins with a survey of historiography, or "the history of historical writing." Most of the course is devoted to practicing historical methodology (historical "detective work," critical analysis of evidence, asking and answering historical questions, and oral and written presentation skills). Each student will write and present a major research paper on a topic of their choosing. Final paper. Prereq: History 100 or department approval. Sem hrs: 3 fall or spring.

History 300. World History. 3(1). A survey of the major pre-modern civilizations and the development and diffusion of modern cultures throughout the world. This course examines the interaction of traditional and modern cultures culminating with the turbulent twentieth century, and highlights the global impact of political, religious, ideological, military, economic, and social developments. Written assignments. Final exam. Prereq: History 100. Sem hrs: 3 fall or spring.

In addition, this course/program is a primary contributor to the development and assessment of the following USAFA outcomes:

Responsibilities: *Intercultural Competence*
Skills: *Written Communication*
Knowledge: *National Security & Full Spectrum of Joint & Coalition Warfare; Civic, Cultural, and International Environments*

History 320. History of Technology and Warfare. 3(1). Examines the relationship of technology to warfare on land, at sea, and in the air from antiquity to the present. Investigates the roots of weapons technology in the social, political, and engineering context. Special treatment is afforded to the impact of engineering and the industrial revolution on the development of technology and the subsequent impact on warfare. The interrelationship of technology, tactics, and strategy provides the thematic framework. Several lessons are devoted to case studies of battles and campaigns that illustrate significant developments. Term paper and final exam. Prereq: History 100. Sem hrs: 3 spring.

History 325. History of Christianity. 3(1). A historical survey of the Christian church from its ancient Jewish roots to the modern period. The course will examine the significant changes and continuities of Christianity since its founding. Topics include the ancient Jewish kingdoms, the Church's beginning under Jesus and the Apostles, the Age of Martyrs, the writings of the Church Fathers, the Christianization of the Roman Empire, the medieval civilization of Christendom, the Crusades, the Reformation, the effects of the Enlightenment, and the global spread of Christianity. Term paper and final exam. Prereq: History 300. Sem hrs: 3 spring of odd-numbered years.

History 332. History of U.S. Foreign Relations. 3(1). Examines major developments in U.S. foreign relations from colonial times to the present. The course focuses on the myriad of ways Americans interacted with people and nations around the world, including Africa, East Asia, Europe, Latin America, the Middle East, and Russia. Specific consideration is given to the roles of social issues, economic interests, and security concerns in explaining both official foreign policy and unofficial relationships. Coursework centers on classroom lecture and discussion, and extensive analysis of interpretive essays and primary documents. Term paper and final exam. Prereq: History 300. Sem hrs: 3 spring of odd-numbered years.

History 335. History of the American West. 3(1). A study of the special contributions of the American West to the evolution of the United States. Throughout their history Americans have been intrigued and fascinated by their vast frontier. The American frontier served as a granary and a safety valve while helping to shape the American character. This course will explore the validity of Frederick Jackson Turner's frontier thesis and the events that made the West unique. Term paper and final exam. Prereq: History 100. Sem hrs: 3 fall of even-numbered years.

History 336. History of the American South. 3(1). Examines the special contributions of the South to the evolution of the United States, and analyzes the major themes of Southern history in the eighteenth, nineteenth, and twentieth centuries. Emphasis will be placed on understanding ideas and values, especially as the people of the South have perceived them, and their role in Southern society. This course will focus on how Southern society evolved differently from the rest of the United States, and seemingly over a century and a half merged with mainstream America while maintaining a unique identity. Term paper and final exam. Prereq: History 100. Sem hrs: 3 fall of odd-numbered years.

History 338. Colonial Warfare. 3(1). A comprehensive examination of the competition and conflicts that resulted from European explorations and conquests of the fifteenth, sixteenth, and seventeenth centuries that erupted into serial warfare in the eighteenth century. These conflicts exposed all sides to different modes of warfare that would shape future combat. This course examines the causes for these wars (with an emphasis on the conflicts in North America), the changes in tactics and strategy that resulted from the clash of cultures, and the ideologies that sprang from colonization. Term paper and final exam. Prereq: History 100. Sem hrs: 3 fall of even-numbered years.

History 339. The American Civil War. 3(1). A multidimensional examination of the causes, conduct, and legacy of the American Civil War. An in-depth analysis of Southern sectionalism will precede a comprehensive discussion of all aspects of the war itself: military, economic, cultural, social, political, technological and ideological. The course will conclude by describing the short and long-term effects of the war on the American military establishment. Term paper and final exam. Prereq: History 100. Semester hrs: 3 fall.

History 340. History of Colonial Latin America. 3(1). Examines the Native American, Iberian, and African origins of colonial civilization, with special emphasis on the colonial society that evolved after the Spanish and Portuguese conquests. Students will examine the nature of pre-Columbian societies, colonial government, labor systems, landholding patterns, the role of the

Church in society, and the Latin American wars of independence. Term paper and final exam. Prereq: History 300. Sem hrs: 3 fall.

History 341. History of Modern Latin America. 3(1). Examines the post-1825 period of Latin American history. Explains aftermath of the wars of independence, the formation of nation-states, and the emergence of Latin American identities throughout the nineteenth century. Treats major issues of the twentieth century, including political change, industrialization, foreign influence, military institutions, social and demographic pressures, and the United States's role in different national contexts. Term paper and final exam. Prereq: History 300. Sem hrs: 3 spring.

History 342. History of Traditional Asia. 3(1). A survey of the major political, economic, and socio-cultural developments in Asia (primarily China, Japan, India, and Southeast Asia) from prehistoric times to the arrival of the Europeans in the sixteenth century. Explores the major themes of the traditional foundations of Asia, change and continuity, the structure of the traditional Asian world order, and the impact of contact with the European maritime powers. Term paper and final exam. Prereq: History 300. Sem hrs: 3 fall.

History 343. History of Modern Asia. 3(1). A survey of the major political, economic, and socio-cultural developments in Asia (primarily China, Japan, India, and Southeast Asia) from roughly the sixteenth century to the present day. Explores the major themes of the traditional foundations of Asia, the impact of Western imperialism in Asia, the impact of Western ideologies on Asian thought, the importance of technological change, and the significance of political, economic, and cultural leaders. Term paper and final exam. Prereq: History 300. Sem hrs: 3 spring.

History 344. Foundations of European History. 3(1). How did the European continent rise from being a cultural and intellectual backwater to become a political and military powerhouse which eventually extended its influence across the globe? What powerful connections link the ancient world with the present government, religion and culture of the West? Through this survey of European history from Antiquity to 1789, discover how the continent was transformed. Major aspects of European development are analyzed, including ancient Greece, the Roman Republic and Roman Empire, the advent of Christianity, feudalism, the Renaissance, the Reformation, the rise of the nation-state, and the Enlightenment. Term paper and final exam. Prereq: History 300. Sem hrs: 3 fall.

History 345. Modern European History. 3(1). A survey of the political, social, and cultural history of modern Europe, beginning with the French Revolution and continuing through both world wars to contemporary Europe. Major themes include Napoleonic Europe, the industrial revolutions, the European nationalist movements, World War I, the inter-war Years, World War II, the decline of the European empires, the Cold War, and the demise of monolithic regimes. This course concludes with a study of the legacies of the Cold War and the advent of the European Union. Term paper and final exam. Prereq: History 300. Sem hrs: 3 spring.

History 346. History of Russia. 3(1). Survey of Russian and inner Eurasian domestic and foreign affairs from the ninth century to 1917. Emphasis on the ways in which Eastern, Western,

and native influences promoted continuity within the Tsarist Russian state, to include: autocracy, church-state relations, imperialism and non-Russian peoples, great power status, foreign power intervention, and modernization. Term paper and final exam. Coreq: History 300. Sem hrs: 3 fall.

History 347. History of Modern Russia. 3(1). Survey of domestic and foreign affairs from 1900 to the present. Focuses on the dynamics of the Russian Empire's society and government under the last tsar through the Bolshevik seizure of power. Reviews Communist attempts and the final failure to develop a legitimate Soviet state, resulting in fragmentation into fifteen independent nations, including the Russian Federation. Gives special attention to the unique synthesis of military and economic power leading to "superpower" status and its eventual demise. Term paper and final exam. Coreq: History 300. Sem hrs: 3 spring.

History 351. The Foundations of Modern America. 3(1). Examines the political, intellectual, social, and economic origins and development of the United States from the first settlements through the Reconstruction period (1865-1877). Emphasizes the importance of the colonial experience, the Revolution, the national period, the growth of democracy, westward expansion, and the Civil War and Reconstruction in shaping modern America. Term paper and final exam. Coreq: History 300. Sem hrs: 3 fall or spring.

History 352. The History of Modern America. 3(1). Continues the examination of the political, intellectual, social, and economic development of the United States from the late nineteenth century to the present. Concentrates on the growth of the United States as a major economic and political power. Special attention is given to the impact of industrialization, urbanization, immigration, reform movements, mass culture, domestic economic fluctuations, governmental expansion, and military involvements during the twentieth century. Term paper and final exam. Coreq: History 300. Sem hrs: 3 fall or spring.

History 363. Unconventional Warfare. 3(1). Surveys the evolution, theory, and practice of insurgent and revolutionary warfare throughout the world from the 17th century to the present. Special attention is given to the 20th century. Examines counterinsurgency operations in various areas and circumstances. Term paper and final exam. Prereq: History 100. Sem hrs: 3 fall.

History 367. Ancient, Medieval and Early Modern Warfare. 3(1). A broad survey providing a deeper background for the understanding of modern war. The course begins with the rise of organized warfare in the Near East, focusing on the Assyrian and Persian military systems, traces the development and operations of the Greek and Roman military systems, and then moves to the evolution of feudal warfare and its eventual metamorphosis into the earliest forms of modern war, culminating in the Thirty Years War. Moslem, Byzantine, Chinese, and Japanese forms of warfare are also addressed to complete a general survey of the roots of modern warfare. Term paper and final exam. Prereq: History 100. Sem hrs: 3 fall of even-numbered years.

History 368. World War II. 3(1). A study of the largest conflict in human history, including a detailed analysis of the causes, ideologies, strategies, technologies, and campaigns of the war. Students will also examine the economic and social implications of the war on various nation states. Major themes include the role of military and political leadership, the nature of coalition

warfare, and the role of the modern officer in combat. Term paper and final exam. Prereq: History 100. Sem hrs: 3 spring.

History 369. Limited War in the Twentieth Century: Korea and Vietnam. 3(1). America's wars in Korea and Vietnam established new patterns of limited warfare. Within the contexts of the superpower system and a nuclear arms race, the United States tried to fight wars that would achieve limited aims with limited means. This course will examine the Korean and Vietnam Wars as part of larger patterns of contemporary history. Studies will place special emphasis on the role of technology, foreign policy, domestic social and political climates, and the long-term implications of American strategy and policymaking. Term paper and final exam. Prereq: History 100. Sem hrs: 3 spring of even-numbered years.

History 370. World War I. 3(1). A detailed analysis of the epochal event of the twentieth century. Students explore the role of ideology, military and social doctrine, alliance systems, and European militarism on the outbreak and conduct of total war in Europe. Detailed analysis of the disparate military environments of stalemate on the Western Front, deadlock on the high seas and maneuver warfare on the Eastern Front will illustrate the struggle between military doctrine and emerging technology. Special emphasis will be placed on the integration of air power and the emergence of modern paradigms for conducting warfare. Term paper and final exam. Prereq: History 100. Sem hrs: 3 fall of even-numbered years.

History 371. Airpower History. 3(1). History of the air weapon with primary emphasis on leadership and tactics. Covers global development of military airpower, stressing the constant interplay among personalities, institutions, theories, technology, combat experience, and evolving doctrine. Term paper and final exam. Prereq: History 100. Sem hrs: 3 spring.

History 372. Sea Power and Modern Warfare. 3(1). History of sea weapons with primary emphasis on technology, tactics, and leadership as they have evolved from 1000 BC to the present. World-wide treatment stresses the constant interplay among personalities, institutions, theories, technology, combat experience, and the evolving doctrine. Final exam. Prereq: History 100. Sem hrs: 3 spring of even-numbered years.

History 373. History of Sub-Saharan Africa. 3(1). A survey of Sub-Saharan African history, the course will essentially answer the question, “why is Sub-Saharan Africa the way it is today,” by focusing on three eras—the pre-colonial period, the colonial period, and the post-colonial period—and the great transitions between them. The course will help students understand the influence of geograpy and climate, religion, warfare, disease, economics and trade, and domestic and international politics, as well as other forces, on African peoples and societies over time. Term paper and final exam. Prereq: History 300. Sem hrs: 3 fall.

History 374. Foundations of Middle Eastern History. 3(1). Introductory historical survey of early civilizations in the Middle East and North Africa from the dawn of civilization to the fall of Constantinople to the Ottoman Empire in 1453. Emphasis on the classical empires of the Near East, developments and contributions of Judaism and Christianity, the birth and spread of Islam, the impact of the Crusaders and Mongols on the region, and the rise to dominance of the "gunpowder empires." Term paper and final exam. Prereq: History 300. Sem hrs: 3 fall.

History 375. Modern Middle Eastern History. 3(1). A survey of domestic and foreign affairs of the Middle East and North Africa from the rise of the Ottoman Empire to the present. Emphasis on the impact of imperialism, nationalism, constitutionalism, modernization, and reform. Analyzes independence movements of the twentieth century, the Arab-Israeli conflict, the Zionist and Islamic fundamentalist movements, the Gulf War, and other contemporary trends, problems, and challenges. Term paper and final exam. Prereq: History 300. Prior completion of History 374 is recommended but not required. Sem hrs: 3 spring.

History 376. A History of Space Power: Conquest of the New Frontier. 3(1). History of space power with primary emphasis on the U.S. and Soviet space programs during the Cold War and beyond (ICBMs to satellites; the electronics revolution to manned space programs) and their origins in the German V- programs of World War II. Examines the interplay between leadership, politics, society, technology, the USAF's ambivalent relationship with this new expression of military power, and the associated doctrinal challenges. Term paper and final exam. Prereq: History 100. Sem hrs: 3 spring of even-numbered years.

History 381. Topics in Asian Military History. 3(1). A survey of the military history of Asia. Examines the evolution of warfare in Asia, including the political, economic, and social roles played by military forces, the influence of Western military science, and the impact of the global conflicts of the twentieth century. Term paper and final exam. Prereq: History 100. Sem hrs: 3 fall of even-numbered years.

History 382. Topics in African Military History. 3(1). A survey of the military history of Africa. Examines the evolution of warfare in Africa, including the political, economic, and social roles played by military forces, the influence of Western military science, and the impact of the global conflicts of the twentieth century. Term paper and final exam. Prereq: History 100. Sem hrs: 3 spring of odd-numbered years.

History 383. Topics in Middle Eastern Military History. 3(1). A survey of the military history of the Middle East. Examines the evolution of warfare in the Middle East, including the political, economic, and social roles played by military forces, the influence of Western military science, and the impact of the global conflicts of the twentieth century. Term paper and final exam. Prereq: History 100. Sem hrs: 3 fall of odd-numbered years.

History 384. Topics in Latin American Military History. 3(1). A survey of the military history of Latin America. Examines the evolution of warfare in Latin America, including the political, economic, and social roles played by military forces, the influence of Western military science, and the impact of the global conflicts of the twentieth century. Term paper and final exam. Prereq: History 100. Sem hrs: 3 spring of even-numbered years.

History 394. The American Way of War. 3(1). This course surveys the history of American warfare from the colonial period to the present. It focuses primarily on the nature of American warfare, and addresses the question of whether there is a peculiar American way of war. The course deals with such issues as the American attitude toward war, civil-military relations, force

structure, the role of professional leadership, and the impact of technology. Term paper and final exam. Prereq: History 100. Sem hrs: 3 spring of odd-numbered years.

History 457. History of Military Thought. 3(1). Historical investigation of the ideas of selected major military thinkers from the time of Machiavelli to the present. Emphasis is on those writers whose impact on evolving strategy and doctrine, whether on land, sea or in the air, has been most far-reaching. Term paper and final exam. Prereq: History 100 and C1C Standing. Sem hrs: 3 fall.

History 480. Studies in American Civilization. 3(1). Examines conflict and stability at various historical periods in American society; emphasizing such institutions as government, education, religion, the military, business, the family, media, and sports. Focus will change each semester. Final paper and final exam. Prereq: History 351 and History 352, or department approval. Sem hrs: 3 spring.

History 483. Great Americans. 3(1). Examines the role of the individual in American history. Through the illuminating prism of biography, the lives of selected prominent Americans will be studied in order to understand the unique personal qualities that contributed to their success and to determine the extent to which individual actions impact the course of history. Political, military, business, labor, scientific, and literary figures will be featured. Term paper and final exam. Prereq: History 300. Sem hrs: 3 spring of even-numbered years.

History 495. Special Topics. 3(1). Selected topics in history. Term paper and final. Prereq: History 300. Sem hrs: 3 fall or spring.

History 498. Global Dimensions of History. 3(1). An examination of the dynamic forces influential in shaping global history. Explores time, space (geography), politics, economics and society in the context of universal and world history. Special attention is given to the impact of varying cultural perspectives upon individual historical understanding. The current process of globalization and its many challenges are also explored. Final paper and final exam. Prereq: History 230 and C1C standing. Sem hrs: 3 spring.

History 499. Independent Study. 3(0). Reading and research in any recognized area of historical study. Areas selected by instructor depend on student interest. Research paper or intensive reading program with written analysis of assigned works. Prereq: Department approval and 3.0 cum GPA. Sem hrs: 3 fall or spring.

- History 499A. Independent Study. 2(0). Sem hrs: 2 fall or spring.
- History 499B. Independent Study. 1.5(0). Sem hrs: 1.5 fall or spring.
- History 499C. Independent Study. 1(0). Sem hrs: 1 fall or spring.

HUMANITIES (Hum)

Offered by the Departments of the Humanities Division

Hum 200. Introduction to the Humanities. 3(1). Interdisciplinary course. A seminar-style introduction to the intellectual history of Western Civilization through literature, philosophy, the fine-arts, and the history of law and science. The course aims to lay the foundation for further

study in the disciplines of the humanities, to enhance integrated knowledge and critical thinking, and to prepare students for advanced study. Hum 200 is a core substitute for English 211 and can be taken by cadets enrolled in the Academy Scholars Program. Final project. Prereq: Course director approval. (Administered by the Humanities Division Chair). Sem hrs: 3 spring.

In addition, this course/program is a primary contributor to the development and assessment of the following USAFA outcomes:

Skills: Oral and Written Communication, Critical Thinking

Knowledge: Civic, Cultural, and International Environments

Hum 400. Humanities Seminar. 3(1). Interdisciplinary course. A seminar focused on the history of Western Civilization, through literature, the arts, and philosophy. Related topics include the history of law and history of science, and their impact on trends in the humanities. This approach is invaluable for enhancing integrated knowledge and critical thinking, and is excellent preparation for cadets wishing to pursue graduate studies. Hum 400 is a core substitute for English 411. Cadets enrolled in the Academy Scholars Program (ASP) who completed Hum 200 may take Hum 400 toward ASP requirements. Cadets enrolled in the ASP who did not take Hum 200 may elect to take Hum 400S. Final project. Prereq: 3.0 cum GPA and course director approval. (Administered by the Humanities Division Chair). Sem hrs: 3 fall.

Hum 401. Humanities Divisional Core Substitute. 3(0). This course can only be awarded for coursework accomplished during a semester of study abroad (CSSAP), international exchange (CSEAP), or service academy exchange (SAEP). With applicable Department Head or Division Chair approval, this course can fulfill the core requirement for English 411, MSS 415/416, or Philos 310. Sem hrs: 3 fall or spring.

Hum 402. Scholarship Studies. 2(1). Scholarship Studies is an interdisciplinary course designed to prepare cadets for the rigors of Rhodes, Marshall, Gates, and Churchill scholarship application processes. The course helps cadets to focus on refining their leadership skills, increase awareness of application and interview subjects, and develop the intellectual methods required to articulate the complexities of modern problems. The course further prepares scholarship applicants for advanced academic studies. Enrollment consists primarily of first-class cadets. Pass/fail. Prereq: GSC approval. (Administered by the Graduate Studies Office of Student Academic Affairs). Sem hrs: 2 fall.

Hum 430. The Holocaust. 3(1). The subject of the Holocaust, the destruction of the Jews of Europe and others at the hands of the Nazis and their collaborators, is of great significance in the history of human civilization. The extensive documentation of this systematic genocide lends itself to a pedagogical examination of critical lessons in the study of human history and behavior, as well as ethical issues. Through this investigation, cadets can also understand what it means to be a responsible citizen and soldier. Final exam. Prereq: History 300 or divisional approval. Sem hrs: 3 spring of even-numbered years.

Hum 461. Russian Literature. 3(1). A study of representative Russian authors (such as Pushkin, Chekhov, Dostoevsky, Tolstoy, Sholokhov, Pasternak, and Solzhenytsyn) in their historical and cultural setting and their impact on the shaping of the national character of the Russian people. Final exam. Sem hrs: 3 fall.

Hum 463. Far Eastern Literature. 3(1). An historical survey and analysis of major literary works of the Far East with emphasis on China and Japan. Final exam. Sem hrs: 3 fall or spring.

Hum 475. Army Heritage and Operations. 3(1). Survey of the United States Army, its history and traditions, doctrine, and tactics. This course prepares students for commissioning as Army officers and attendance at the Army's Basic Officer Leader Course Phase II (BOLC II) by familiarizing them with the history and heritage of the Army; providing a basic understanding of fundamental Army operational and tactical doctrine; and introducing students to small unit leadership, doctrine, tactics, techniques, and procedures (TTP) of company grade leadership – Troop Leading Procedures (TLP). Written assignments, land navigation, and Tactical Exercise Without Troops (TEWT). Prereq: C1C standing; priority given to cadets with submitted written requests for Army Service Transfer (cross commissioning). Final exam. (Administered by Department of History). Sem hrs: 3 spring.

Hum 495. Special Topics. 1-3(1). Selected topics in humanities. Final exam or final report. Prereq: Department approval. Semester hours and offering time determined by department (not more than 3 sem hrs).

LAW

Offered by the Department of Law (DFL)

Law 220. Law for Air Force Officers. 3(1). A core course introducing cadets to the legal knowledge and skills they will need as Air Force officers and educated citizens. The course examines the nature of law and its role in American society and the military; provides an overview of the American civilian and military justice legal systems; examines selected foundational constitutional rights, particularly as they apply in the armed forces; and introduces substantive areas of the law that military officers likely will encounter in their official capacities, including criminal law, military administrative law, and the law of armed conflict. Final exam. Prereq: None. Sem hrs: 3 fall or spring.

In addition, this course/program is a primary contributor to the development and assessment of the following USAFA outcomes:

Responsibilities: Service to the Nation
Skills: Written Communication, Decision Making
Knowledge: Ethics and the Foundations of Character

Law 221. Legal Research, Writing, and Advocacy. 3(1). Following an introduction to the fundamentals of legal research and legal reasoning, students will do various exercises intended to enhance research skills, hone the ability to recognize and articulate legal issues, foster critical analysis and promote effective communication. Students will also practice advocacy skills. The course culminates with the students preparing a legal memorandum or equivalent legal document. Students will receive a fact scenario that presents an ill-defined issue of law. They will draft an appellate brief or equivalent document which they will use to advocate a position in oral argument. Final project. Prereq/Coreq: Law 220. Sem hrs: 3 fall or spring.

Law 331. Criminal Law and Procedure. 3(1). This course examines selected crimes and defenses and focuses on how and why selected constitutional rights constrain the government and protect individual liberties in the context of criminal law and procedure. Skills emphasized include critical thinking, legal problem-solving, and oral and written communication. Final exam or final report. Prereq: Law 220 or department approval. Sem hrs: 3 fall.

Law 340. Business Law. 3(1). An in depth study of law governing commerce and business organizations in the United States. Emphasis will be placed on contracts, formation of business organizations and laws which regulate the workplace environment. Final exam or final report. Prereq: Law 220 or department approval. Sem hrs: 3 spring.

Law 351. U.S. Constitutional Law. 3(1). This course is an in-depth analysis of selected provisions of the U.S. Constitution and Supreme Court decisions interpreting them. Topics include powers of the branches of the federal government, federal-state relations, and individual rights as limitations on governmental power. Skills emphasized include critical thinking, legal problem-solving, and oral and written communication. Final exam or final report. Prereq: Law 220 and C1C or C2C standing. Sem hrs: 3 spring.

Law 360. Law and Literature. 3(1). This interdisciplinary seminar entails the in-depth study of selected literary works that provide insights and raise questions concerning important legal issues and the nature and purposes of law. Emphasis will be placed on developing critical reading, speaking, and writing skills. Final report. Prereq: English 211 and Law 220. Sem hrs: 3 fall of even-numbered years.

Law 361. Modern Application of the Law of Armed Conflict (LOAC). 3(1). This course provides a detailed overview of the modern requirements and restrictions on military operations, with particular emphasis on combat operations between military forces. The legal framework that guides an officer at the strategic and operational level will be analyzed. Special focus on the Geneva and Hague Conventions, along with more current agreements such as the Landmine treaty, and Rome/International Criminal Court treaty. Final exam or final paper. Prereq: Law 220. Sem hrs: 3 fall.

Law 421. Law for Commanders. 3(1). This course is more than just a continuation and expansion of Law 220, Law for Air Force Officers. Focus is on using real-world scenarios to help students think like a commander who has respect for the rule of law, knows how to evaluate basic legal advice about a problem, and appropriately uses it to make good decisions for the Air Force. Examines command authority over AF personnel, the extent of that authority to accomplish the mission and instill good order and discipline, the effective use of disciplinary tools, and common command/legal concerns facing leaders. This is a hands-on, application class that allows students to practice problem-solving skills and to communicate solutions and rationale in an appropriate manner. Cadets cannot earn credit for both Law 421 and Law 422. Final exam or final paper/project. Prereq: Law 220 and Legal Studies major with C1C standing or departmental approval. Sem hrs: 3 fall.

Law 422. Commander's Use of Military Law. 3(1). This course is designed for students who have not had an in-depth study of law beyond Law 220. This course is more than just a

continuation and expansion of Law 220, Law for Air Force Officers. Focus in on using real-world scenarios to help students think like a commander who has respect for the rule of law, knows how to evaluate basic legal advice about a problem, and appropriately uses it to make good decisions for the Air Force. Examines command authority over AF personnel, the extent of that authority to accomplish the mission and instill good order and discipline, the effective use of disciplinary tools, and common command/legal concerns facing leaders. This is a hands-on application class that allows students to practice problem-solving skills and to communicate solutions and rationale in an appropriate manner. Cadets cannot earn credit for both Law 421 and Law 422. Final exam or final paper/project. Prereq: Law 220 and C1C standing or departmental approval. Sem hrs: 3 spring.

Law 440. Cyberlaw. 3(1). This course explores the multitude of legal issues affected by the use of computers and the Internet. The course closely examines the evolution of criminal law in cyberspace, specifically the problems associated with jurisdiction, the right of privacy, search and seizure, and evidence. The course will also examine how cyberspace impacts the law of war, including what constitutes the use of force in cyberspace, and how this all influences traditional notions of sovereignty. Although some basic technical information will be discussed during the semester, this course is designed for the non-technical student. The emerging legal issues discussed will also stimulate the interest of the technical student. As future commanders, cadets must be prepared to handle computer related legal issues, whether criminal, intellectual property, or use of force. This course will discuss these emerging problems of the 21st century. Final exam or final project. Prereq: Law 220. Sem hrs: 3 fall.

Law 456. National Security Law. 3(1). This course offers an examination of the domestic and international legal authority affecting US national security matters and the command and control of the key instruments of the national security, focusing on the US military. Topics include: Presidential and Congressional treaty and war powers under the Constitution; command and control of the military under the modern national security system; legal authority for the international use of force; intelligence and information security law; terrorism and unconventional warfare; and domestic uses of military and the Posse Comitatus Act. Final exam or report. Prereq: Law 220. Sem hrs: 3 fall.

Law 461. International Law. 3(1). A course studying the legal principles which govern relations among nations. Students will study the historical development of international law and important principles which govern relations among nations today. Topics include: options for settlement of disputes; the law which affects military operations and the status of U.S. forces stationed overseas; roles and powers of international organizations; and law of the sea. Final exam or report. Prereq: Law 220. Sem hrs: 3 spring.

Law 466. Advanced Topics in the Law of Armed Conflict (LOAC). 3(1). This course goes beyond fundamental principles and primary sources of LOAC from Law 361, focusing on unsettled questions and contemporary issues. Topics include the modern use of force, definitions of combatants, the interplay of LOAC and human rights law, international criminal tribunals, rule of law efforts, and other current issues. Students explore primary and secondary sources in a seminar setting, enhancing critical analysis and sharpening oral and written communication skills. Final paper. Prereq: Law 361 and department permission. Sem hrs: 3 spring.

Law 485. Legal Studies Capstone. 3(2). This course uses multiple law-related scenarios based upon contemporary military, national, and international issues. It affords students the opportunity to integrate knowledge and expertise acquired in other law courses and further hone their analytical and communication skills as they work together to identify and resolve complex legal issues. Final exam or final project. Prereq: Law 421 and Legal Studies major with C1C standing or department approval. Sem hrs: 3 spring.

Law 495. Special Topics. 3(1). Selected topics or topics in law. Final exam or final report. Prereq: Department approval. Sem hrs: 3 fall or spring.

Law 499. Independent Study. 3(0). Study and research in a legal topic or topics of choice for students who have demonstrated their ability for advanced study in regularly offered enrichment courses. Topics and meetings arranged with the instructor. Final report(s). Prereq: Department approval. Sem hrs: 3 fall or spring.

- Law 499A. Independent Study. 2(0). Sem hrs: 2 fall or spring.
- Law 499B. Independent Study. 1.5(0). Sem hrs: 1.5 fall or spring.
- Law 499C. Independent Study. 1(0). Sem hrs: 1 fall or spring.

MANAGEMENT (Mgt)
Offered by the Department of Management (DFM)

Mgt 303. Management Perspectives. 3(2). Managers are responsible for systems architecture and maintenance. These roles demand the development of life-long learners who can creatively solve organizational problems through the adaptive use of information. This course will help cadets understand their role as a systems architect, while informing their need to work diligently throughout their time in the major. Managerial competence is dependent on the acquisition of requisite variety, which can only be obtained by mastering each management area. Final exam or final project. Prereq: Mgt major or Department Head approval. Sem hrs: 3 fall.

Mgt 337. Managerial Finance. 3(1). A study of financial decisions and their effects on organizations. Emphasis is on developing the concept of risk/return tradeoff as well as inter-temporal monetary tradeoffs. Topics include time value of money (including stock and bond valuation), project capital budgeting and analysis, cost of capital, and capital structure (including dividend policy). A key construct is the impact of decisions on the value of the firm. Case studies and problems expose the student to current financial problems and their solutions. Final exam or final project. Prereq: Mgt 341 or AIC approval. Sem hrs: 3 spring.

Mgt 341. Financial Accounting. 3(1). Analysis of business transactions and recording of business data taught from the perspective of understanding the theoretical and practical issues in measurement of income, assets, liabilities and owner's equity. Annual reports used to perform financial statement analysis. Alternative accounting methodologies permitted under GAAP are explored. Final exam or final project. Coreq: Mgt 303 or AIC approval. Sem hrs: 3 fall.

Mgt 342. Managerial Accounting. 3(1). Focuses on the uses of accounting information by managers. Discusses full cost accounting and responsibility accounting, from the perspective of

data collection and analysis, for short and long range decisions. Topics include cost behavior, activity-based costing, contribution margin analysis, measurement of cost of goods manufactured, capital budgeting, and management control systems. Final exam. Prereq: Mgt 341 or AIC approval. Sem hrs: 3 spring.

Mgt 345. Human Managerial Systems I. 3(2). An introduction to individual and group theories of behavior, and their integration into the organization as-a-whole. Theories of attitude, behavior, and cognition are applied to the understanding of how to make decisions based on accurate diagnoses of situations that involve people in organizational systems. Organizational behavior issues like motivation, organizational citizenship behavior, organizational justice, decision making, conflict/negotiation, productivity, organizational learning, participative management, and power and politics will be applied to human capital issues such as human resource planning, job design/analysis, performance appraisal, pay-for-performance, training and career development, and legal issues in the work place. Topics will apply to both the public and private sectors. Students learn through a variety of experiential exercises and case studies. Final exam or final project. Coreq: Mgt 303 or AIC approval. Sem hrs: 3 fall.

Mgt 361. Human Managerial Systems II. 3(1). This course is a continuation of Mgt 345 with greater depth and more emphasis on case studies and practical application of course concepts. Final exam or final project. Prereq: Mgt 303; Mgt 345 or AIC approval. Sem hrs: 3 spring.

Mgt 372. Introduction to Investments. 3(1). This course introduces financial markets, investment vehicles (stocks, bonds, mutual funds, and derivatives), and retirement planning. Specific topics include time value of money, risk and return, valuation, portfolio mathematics, behavioral finance, and the basics of mutual funds. Additionally, officer-relevant personal finance discussions enrich the core material. This course is introductory in nature and assumes no knowledge of accounting or financial markets. A term project provides experience in comprehensive portfolio management—developing and analyzing investment opportunities for a young officer's portfolio. Designed for non-Management majors. Final exam and/or final project. Prereq: None. Sem hrs: 3 fall or spring.

Mgt 375. Market Analysis. 3(1). This course emphasizes how marketing concepts can be used to analyze different markets to both determine customer needs, and to deliver customer value. Both product and service markets are analyzed with special emphasis on government and public sector concerns. This course covers market research, segmentation, distribution, supply chain, cost, and pricing considerations. In addition, this course is designed to provide cadets certain market analysis tools they will find useful in Mgt 419, Technological Innovation Management. Final exam or final project. Prereq: None. Sem hrs: 3 spring.

Mgt 382. Investments. 3(1). This course introduces financial markets, investment vehicles (stocks, bonds, mutual funds, and derivatives), and retirement planning. Specific topics include time value of money, risk and return, valuation, portfolio mathematics, behavioral finance, and the basics of mutual funds. Additionally, officer-relevant personal finance discussions enrich the core material. This course assumes a prior knowledge of the principles developed in Financial Accounting. This course may be completed before, after, or concurrently with Managerial Finance. A term project provides experience in comprehensive portfolio management—

developing and analyzing investment opportunities for a young officer's portfolio. Final exam and/or final project. Coreq: Mgt 341. Sem hrs: 3 fall or spring.

Mgt 391. Information Technology for Organizations. 3(1). This course examines how organizations use information technology to support the four major management functions of planning, organizing, leading, and controlling. Topics include information systems management, telecommunications, hardware trends, data warehousing, and information security in cyberspace. Students develop proficiency with current database and spreadsheet applications. Application of contemporary theory to both critical issues in the public and private sectors is stressed through seminars, case studies, field trips, and projects. Final exam or final project. Prereq: None. Sem hrs: 3 spring.

Mgt 392. Organizational Networks in Cyberspace. 3(1). This course examines how organizations use information technology to develop and manage relationships with external institutions. Topics covered include electronic commerce, supply chain management, customer relationship management, e-government, and electronic networking in cyberspace. Emphasis is placed on legal, cultural, and international issues. Case studies offer a real-world emphasis. Organizational strategies are analyzed, using examples of both successful and unsuccessful online implementations. Students get hands-on web site development experience. Final exam or final project. Prereq: None. Sem hrs: 3 fall.

Mgt 400. Management and Command. 3(1). This course introduces students to the complex and dynamic nature of the world in which Air Force officers operate. Through content that is linked to systems theory, this interactive course focuses on the successful techniques that allow officers to understand and influence their environment. Using various models and processes, cadets will explore the interrelationships of power and the context within which it occurs. Students will gain insights into how to make decisions for situations that involve complexity and uncertainty. The tools are applied to both military and non-military scenarios, with an emphasis on the transition from the cadet role to the role of an officer. Final exam or final project. Prereq: Beh Sci 310, Philos 310, non-Mgt majors. Sem hrs: 3 fall or spring.

In addition, this course/program is a primary contributor to the development and assessment of the following USAFA outcomes:

Responsibilities: Lifelong Development and Contributions
Skills: Information Literacy, Decision Making
Knowledge: Ethics and the Foundations of Character

Mgt 405. Management Seminar. 0(1). A course for 1° Mgt majors that provides the opportunity for the presentation of cadet and faculty research, guest lectures, seminars on career and graduate school opportunities for Mgt majors in the Air Force, goal setting exercises, and applications of Mgt principles. Prereq: C1C Mgt major. Pass/fail. Sem hrs: 0 fall.

Mgt 406. Management Seminar. 0(1). A course for Management majors that provides the opportunity for the presentation of cadet and faculty research, guest lectures, seminars on career and graduate school opportunities for Management majors in the Air Force, goal setting exercises, and applications of management principles. Prereq: C1C Management major. Pass/fail. Sem hrs: 0 spring.

Mgt 419. Technological Innovation Management. 3(1). This course examines how to recognize, analyze, and exploit opportunities in the competitive environments faced by business, nonprofit, and government organizations. Students will explore the resources, processes, and structures necessary to transfer technological innovations to appropriate markets. Application of innovation management theories is stressed through the use of case studies, analysis papers, field trips, and projects. By the end of the course, students will have completed a feasibility study of a new concept which can be further developed in capstone projects. Final project. Prereq: C1C Standing. Sem hrs: 3 fall.

Mgt 420. Management Capstone Practicum. 3(2). Cadets complete an original, applied systems research and/or development project that demonstrates their capacity to solve complex problems in an organizational setting. Each cadet chooses a project from among three options: 1) Management Field Studies: Teams or individuals complete advanced case studies or organizational consulting projects for clients developed through DFM or arranged by the team independently with DFM approval--cadets will work closely with clients and faculty to define and analyze difficult managerial and competitive problems and make recommendations for future action by the client or subject organization; 2) Venturing Projects: Teams or individuals will develop or select innovative projects and create new venture plans or feasibility studies; or 3) Research projects: Teams or individuals will propose and investigate significant managerial or technological issues in a research context. These projects require extensive interaction with faculty to develop research findings that can be presented and/or published. Final project. Prereq: C1C Standing; Mgt or Soc Sci major. Sem hrs: 3 spring.

Mgt 423. Managerial Economics. 3(1). Traditional economic theory emphasizing the principles of product and factor pricing, allocation and employment of resources, and the implications of various market structures. In addition to these microeconomic topics, the use of other economic tools which may aid the decision maker will be discussed including topics in macroeconomics and international economics. (Administered by the Department of Economics and Geosciences.) Final exam or final project. Prereq: Econ 201 and Mgt 303 or AIC approval. Semester hrs: 3 fall or spring.

Mgt 440. Management Lessons in Literature. 3(1). Through a collection of classic and contemporary stories, novels, and plays, this course provides a unique perspective of organizational life. The course looks at what authors like Arthur Miller and Mark Twain can tell you about being a more effective manager. Great literature reflects familiar patterns of behavior in a variety of circumstances. But, unlike self-help, inspirational, and how-to manuals, they dispense no advice; they preach no morals; they prescribe no rules. In a world of turbulent change, the works of literature offer us vivid testimony as to what stays constant in human behavior. Final exam or term project. Prereq: Mgt 303 or AIC approval. Sem hrs: 3 spring.

Mgt 448. Power and Influence in Organizations. 3(1). Focus is on understanding how managers can effectively mobilize resources to be effective in their job. This course examines how power is acquired, retained, and used in organizations. In addition, it explores what effect power has on employees and the overall performance of the organization. Students learn through a variety of experiential exercises and case studies. Final exam or final project. Prereq: Econ

201; C1C standing; Mgt majors or DFM Deputy for Academics approval. Sem hrs: 3 spring.

Mgt 472. Strategic Management Capstone. 3(2"). This course emphasizes the integration of organizational strategy formulation and implementation to include such topics as the strategic management process, environmental forecasting and analysis, strategic planning, top-level decision-making, the strategic use of technology, the management of innovation, and strategic control. Application of contemporary theory to critical issues in the public and private sectors is stressed through the use of seminars, case studies, field trips, distinguished guest speakers, and projects. Final integrated case study or project. Prereq: Mgt 303 or AIC approval; C1C standing; Mgt, or Soc Sci major. Sem hrs: 3 fall.

Mgt 477. Production and Operations Management. 3(1). This course is an in-depth examination of the issues, strategies, and analytic techniques involved in providing resources to accomplish Air Force missions. The dominant theme is providing quality products on time and at a minimal cost. We discuss qualitative and quantitative approaches for managing production, logistics, and service organizations to create higher quality and greater efficiency. Research project and field trip. Final exam or final project. Prereq: None. Sem hrs: 3 fall.

Mgt 478. Supply Chain Management. 3(1). Focus is on understanding how managers can effectively create, modify, and manage supply chain strategies to be effective in business or a military operation. This course examines purchasing, logistics, and limited operations management concepts and how to apply these to upstream and downstream supply chain strategies that can be employed to complement organizational strategy. The course will examine trust, power, culture, globalization, and other interorganizational issues. Students learn through a variety of experiential activities and case studies. Designed for all future Air Force officers, especially those interested in the career fields of acquisitions, contracting, logistics readiness, engineering, and aircraft/munitions maintenance. Final exam or final project. Prereq: None. Sem hrs: 3 spring.

Mgt 495. Special Topics. 3(1 or 2). Selected topics in management. Final exam or final project. Prereq: Department approval. Sem hrs and offering time determined by department (not more than 3 sem hrs).

Mgt 498. International Management. 3(1). As a result of the increase in communications and flow of information, there is a growing need to possess a greater understanding about global, cross-cultural management issues. This course examines management on an international level looking at cultural, legal, financial, and trade considerations for managing in the Global Century, while integrating the functional areas of management. Final exam or final project. Prereq: None. Sem hrs: 3 spring.

Mgt 499. Independent Study. 3(0). Tutorial investigation of a specific area of management. Final exam or final project. Prereq: Requires departmental approval of USAFA Form 0-498 prior to enrollment. Sem hrs: fall or spring.

- Mgt 499A. Independent Study. 2(0). Sem hrs: 2 fall or spring.
- Mgt 499B. Independent Study. 1.5(0). Sem hrs: 1.5 fall or spring.
- Mgt 499C. Independent Study. 1(0). Sem hrs: 1 fall or spring.

<u>MATHEMATICS</u> (Math)
Offered by the Department of Mathematical Sciences (DFMS)

Math 130. Basic Math – Algebra and Trigonometry. 3(1). This course is designed to help reinforce algebraic and trigonometric skills necessary for success in the technical core. Basic graphing, algebraic manipulation, and trigonometric calculations are covered. Elementary functions, function manipulation, and some function applications are also discussed. This course may be used as an Academy option to fulfill graduation requirements. This course does not fulfill any major's requirements. Final exam. Prereq: Can only be enrolled in the course by recommendation of the Department of Mathematical Sciences. Sem hrs: 3 fall.

Math 141. Calculus I. 3 (1). The study of differential calculus. Topics include functions and their applications to physical systems; limits and continuity; a formal treatment of derivatives; numeric estimation of derivatives at a point; basic differentiation formulas for elementary functions; product, quotient, and chain rules; implicit differentiation; and mathematical and physical applications of the derivative, to include extrema, concavity, and optimization. Significant emphasis is placed on using technology to solve and investigate mathematical problems. Final exam. Prereq: None. Sem hrs: 3 fall or spring.

In addition, this course/program is a primary contributor to the development and assessment of the following USAFA outcomes:

Skills: Quantitative Literacy and Written Communication
Knowledge: Principles of Science and the Scientific Method

Math 142. Calculus II. 3(1). A study of integral calculus with a focus on the Fundamental Theorems and their application. Topics include: estimating area under a curve, accumulation and total change, basic numeric integration methods, antiderivative formulas for the elementary functions, integration by substitution and parts, improper integrals, differential equations, exponential growth and decay, an introduction to Taylor Series, and mathematical and physical applications of the Fundamental Theorems. Physical applications include area and volume problems and the concept of work. Final exam. Prereq: Math 141. Sem hrs: 3 fall or spring.

In addition, this course/program is a primary contributor to the development and assessment of the following USAFA outcomes:

Skills: Quantitative Literacy and Written Communication
Knowledge: Principles of Science and the Scientific Method

Math 152. Advanced Placed Calculus II. 3(1). Integral calculus for advanced-placed fourth-class cadets. Content is similar to Math 142, but with more in-depth study of concepts and applications. Final exam. Prereq: C4C standing and qualifying performance on DFMS placement exam. Sem hrs: 3 fall or spring.

In addition, this course/program is a primary contributor to the development and assessment of the following USAFA outcomes:

Skills: Quantitative Literacy and Written Communication
Knowledge: Principles of Science and the Scientific Method

Math 243. Calculus III. 3(1). Multivariate calculus. Topics include solid analytical geometry

to include lines, planes, and surfaces in 3-space; vector functions, partial differentiation, and directional derivatives; maxima and minima in multiple dimensions and the method of Lagrange Multipliers; multiple integration and line integrals culminating in Green's Theorem. Designed for cadets who indicate an interest in a technical major. Cadets cannot take and receive credit for both Math 243 and Math 253. During their first attempt at Math 243, cadets will have grade protection. Cadets may drop the course anytime during the semester through lesson 30 and receive a "W". Cadets previously enrolled in Math 253 are not eligible for grade protection. A cadet will not be considered deficient in academics solely based on a failing grade at prog in Math 243. Final exam. Prereq: C or better in Math 142 (or Math 152). Waiver authority is Deputy Head for Academics. Sem hrs: 3 fall or spring.

Math 245. Differential Equations. 3(1). Modeling with and analysis of first order and second order linear ordinary differential equations as well as modeling with and analysis of systems of ordinary differential equations. Solution techniques will involve analytical, numerical, and qualitative approaches. These approaches may include separation of variables, integrating factors, method of undetermined coefficients, eigenvector/eigenvalue solutions, transform techniques, Euler and Runge-Kutta methods. The course will include applications that may draw from biological, mechanical, electrical, and other fields of study. Final exam. Prereq: Prior completion of Math 243 (or Math 253) is strongly recommended. C or better in Math 142 (or Math 152) or advanced-placement through DFMS exams. Waiver authority is the DFMS Deputy Head for Academics. Sem hrs: 3 fall or spring.

Math 253. Advanced Placed Calculus III. 3(1). A more intense study of multivariate calculus for advanced-placed fourth-class cadets. Content is similar to Math 243. Additional emphasis is placed on mathematical and physical applications in preparation for cadets interested in pursuing a technical major. Final exam. Prereq: Advanced placement through DFMS exams. Sem hrs: 3 fall.

Math 300. Introduction to Statistics. 3(1). Topics include descriptive statistics, emphasizing graphical displays; basic probability and probability distributions; sampling distribution of the mean and the Central Limit Theorem; statistical inference including confidence intervals and hypothesis testing; correlation; and regression. Math 300 is designed primarily for majors in the Social Sciences and Humanities. It emphasizes the elements of statistical thinking, focuses on concepts, automates most computations, and has less mathematical rigor than Math 356. Final exam. Prereq: Math142/152 or department approval. Sem hrs: 3 fall or spring.

In addition, this course/program is a primary contributor to the development and assessment of the following USAFA outcomes:

Skills: Quantitative Literacy

Knowledge: Principles of Science and the Scientific Method

Math 310. Mathematical Modeling. 3(1). An introductory course in mathematical modeling. Students model various aspects of real-world situations chosen from Air Force applications and from across academic disciplines, including military sciences, operations research, economics, management, and life sciences. Topics include: the modeling process, graphical models, proportionality, model fitting, optimization, and dynamical systems. Several class periods are devoted to in-class work on small projects. Math 310 is not appropriate for Math or Ops Rsch

majors. Final exam. Prereq: Completion of core math. Sem hrs: 3 spring of odd-numbered years.

Math 320. Foundations of Mathematics. 3(1). Course emphasizes exploration, conjecture, methods of proof, ability to read, write, speak, and think in mathematical terms. Includes an introduction to the theory of sets, relations, and functions. Topics from algebra, analysis, or discrete mathematics may be introduced. A cadet cannot receive credit for both Math 320 and Math 340. Final exam or final project. Prereq: Completed Math 142 or Math 152 with a 'C' or better. Waiver authority is the Deputy Head for Academics. Sem hrs: 3 fall or spring.

Math 340. Discrete Mathematics. 3(1). Useful for cadets interested in applications of mathematics to computer science and electrical engineering. Propositions and logic; sets and operations on sets; functions, recursion, and induction; graphs, trees, and their applications; discrete counting and combinatorics. A cadet cannot receive credit for both Math 320 and Math 340. Final exam. Prereq: Comp Sci 110 and C3C standing or department approval. Sem hrs: 3 spring.

Math 342. Numerical Analysis. 3(2). An introductory numerical analysis course. Specific topics include roundoff, truncation, and propagated error; root finding; fixed point iteration; interpolating polynomials; and numerical differentiation and integration. The approach is a balance between the theoretical and applied perspectives; laboratories emphasize programming methods and applying a computer algebra system to theoretically analyze methods. Final exam or final project. Prereq: Math 243 and either Comp Sci 211 or department approval. Sem hrs: 3 fall.

Math 344. Matrices and Differential Equations. 3(1). Properties, types, and operations of matrices; solutions of linear systems; Euclidean vector spaces, linear independence, and bases; eigenvalues and eigenvectors. Computational aspects. Applications to differential equations. First- and second-order differential equations and systems. Models may include population growth, warfare, and economics. A cadet cannot receive credit for both Math 344 and Math 360. Final exam. Prereq: Math 142 or department approval. Sem hrs: 3 spring.

Math 346. Engineering Math. 3(1). Provides advanced mathematical concepts and skills necessary for technical disciplines. Topics include differential and integral vector calculus (surface integrals, flux, Divergence Theorem, Stokes' Theorem), Fourier series, orthogonal functions, and partial differential equations (separation of variables, transform methods, and numerical techniques). Final exam. Prereq: C or better in both Math 243 (or Math 253) and Math 245 (or ECE 231). Waiver authority: Deputy Head for Academics. Sem hrs: 3 fall or spring.

Math 356. Probability and Statistics for Engineers and Scientists. 3(1). Topics include classical discrete and continuous probability distributions; generalized univariate and bivariate distributions with associated joint, conditional, and marginal distributions; expectations of random variables; Central Limit Theorem with applications in confidence intervals and hypothesis testing; regression; and analysis of variance. This course is a core substitute for Math 300. Credit will not be given for both Math 300 and Math 356, nor for both Math 356 and Math

377. Designed for cadets in engineering, science, or other technical disciplines. Math majors and Operations Research majors should take the Math 377/378 sequence. Final exam. Prereq: Math 142/152. Sem hrs: 3 fall or spring.

In addition, this course/program is a primary contributor to the development and assessment of the following USAFA outcomes:

Skills: Quantitative Literacy

Knowledge: Principles of Science and the Scientific Method

Math 359. Design and Analysis of Experiments. 3(1). An introduction to the philosophy of experimentation and the study of statistical designs. The course requires a knowledge of statistics at the Math 300 level. Topics include design and analysis of single-factor and many-factor studies. A valuable course for all science and engineering majors. Final project. Prereq: Math 356 or Math 378. Sem hrs: 3 spring.

Math 360. Linear Algebra. 3(1). A first course in linear algebra focusing on Euclidean vector spaces and their bases. Using matrices to represent linear transformations, and to solve systems of equations, is a central theme. Emphasizes theoretical foundations (computational aspects are covered in Math 344). A cadet cannot receive credit for both Math 344 and Math 360. Final exam or final project. Prereq/Coreq: Math 320 or department approval. Sem hrs: 3 spring.

Math 366. Real Analysis I. 3(1). A theoretical study of functions of one variable focused on proving results related to concepts first introduced in differential and integral calculus. This course is an essential prerequisite for graduate work in mathematical analysis, differential equations, optimization, and numerical analysis. Final exam or final project. Prereq: Math 320 or department approval. Sem hrs: 3 fall.

Math 370. Introduction to Point-Set Topology. 3(1). Review of set theory; topology on the real line and on the real plane; metric spaces; abstract topological spaces with emphasis on bases; connectedness and compactness. Other topics such as quotient spaces and the separation axioms may be included. A valuable course for all math majors in the graduate school option. Final exam or final project. Prereq: Math 320. Sem hrs: 3 fall of even-numbered years.

Math 372. Introduction to Number Theory. 3(1). Basic facts about integers, the Euclidean algorithm, prime numbers, congruencies and modular arithmetic, perfect numbers and the Legendre symbol will be covered and used as tools for the proof of quadratic reciprocity. Special topics such as public key cryptography and the Riemann Zeta function will be covered as time allows. Final exam or final project. Prereq: Math 320. Sem hrs: 3 spring of odd-numbered years.

Math 374. Combinatorics and Graph Theory. 3(1). Permutations, combinations, recurrence relations, inclusion-exclusion, connectedness in graphs, colorings, and planarity. Theory and proofs, as well as applications to areas such as logistics, transportation, scheduling, communication, biology, circuit design, and theoretical computer science. Final exam or final project. Prereq: Math 340; or Math 320 and one of Math 344 or Math 360 (Math 344 and Math 360 may be taken as corequisites); or department approval. Sem hrs: 3 spring.

Math 377. Advanced Probability. 3(1). Topics include probability fundamentals, discrete and continuous random variables, single and multivariate probability distributions, functions of random variables, sampling distributions, and the Central Limit Theorem. This course is designed for Mathematics and Operations Research majors. Final exam or final project. Prereq: Math 243 (or Math 253). Sem hrs: 3 fall.

Math 378. Advanced Statistics. 3(1). Topics include point and interval estimation, properties of point estimators, sample inferential statistics with confidence intervals, hypothesis testing, ANOVA, linear regression, design and analysis of experiments, and nonparametric statistics. This course is a core substitute for Math 300 but has much more rigor and depth. Credit will not be given for both Math 300 and Math 378. Final exam or final project. Prereq: Math 377. Sem hrs: 3 spring.

In addition, this course/program is a primary contributor to the development and assessment of the following USAFA outcomes:

Skills: Quantitative Literacy

Knowledge: Principles of Science and the Scientific Method

Math 420. Mathematics Capstone I. 3(1). The first semester of the mathematics capstone experience. Students will decide on a topic of independent research in, or related to, the mathematical sciences and begin work with a faculty advisor. Significant progress toward a thesis will be made during the semester. Final project. Prereq: C1C standing in the Mathematics major. Sem hrs: 3 fall.

Math 421. Mathematics Capstone II. 3(1). The second semester of the mathematics capstone experience. Students will complete work on their independent research project and produce a thesis to present their findings. Final project. Prereq: C1C standing in the Mathematics major. Sem hrs: 3 spring.

Math 443. Numerical Analysis of Differential Equations. 3(1). An intermediate numerical analysis course with an emphasis on solving differential equations. Specific topics include solving linear and nonlinear systems; solutions of initial value problems via Runge-Kutta, Taylor, and multistep methods; convergence and stability; and solutions of boundary value problems. Other topics include approximating eigenvalues and eigenvectors and numerically solving partial differential equations. The approach is a balance between the theoretical and applied perspectives with some computer programming required. Final exam or final report. Prereq: Math 346 and one of Math 342 or Physics 356, or department permission. Sem hrs: 3 spring of even numbered years.

Math 451. Complex Variables. 3(1). A valuable course for cadets intending to pursue graduate work in mathematics or its applications, particularly in areas involving partial differential equations. Analytic functions; integration; the Cauchy Integral Theorem and applications; power and Laurent series, residues and poles; conformal mapping with applications to potential theory and fluid flows. Final exam or final project. Prereq: Math 346 or department approval. Sem hrs: 3 spring.

Math 465. Modern Algebra. 3(1). A valuable course for cadets intending to pursue graduate

work in mathematics or its applications. Focuses on the study of algebraic structures and functions between these structures. Topics include: cyclic groups, permutation groups, normal subgroups and quotient groups; rings, ideals, polynomial rings and fields. Depending on instructor and student preferences, applications to coding theory, crystallography, or combinatorics are explored. Final exam or final project. Prereq: Math 320 or department approval. Sem hrs: 3 fall of odd-numbered years.

Math 467. Real Analysis II. 3(1). A theoretical study of functions of several variables to include topology of cartesian spaces, compact and connected sets, convergence of sequences of functions, continuous functions, fixed point theorems, contractions, Stone-Weierstrass approximation theorems, differentiation, partial differentiation, mapping theorems, and Implicit Function Theorem. Final exam or final project. Prereq: Math 366 or department approval. Sem hrs: 3 spring of even-numbered years.

Math 468. Dynamical Systems. 3(1). The study and application of linear and nonlinear differential equations to physical systems from both computational and analytical points of view. Topics vary. Typical choices include systems of differential equations, stability analysis, bifurcations, maps, and chaos. Final exam or final report. Prereq: Math 346 or department approval. Sem hrs: 3 spring of even-numbered years.

Math 469. Partial Differential Equations. 3(1). Solutions of boundary value problems with applications to heat flow, wave motion, and potential theory. Methods of solution include separation of variables and eigenfunction expansion, including Fourier series. Topics typically include the method of characteristics, generalizations to higher dimensions, and the use of non-Cartesian coordinate systems. Additional topics may include numerical methods, nonlinear equations, and transform methods. Final exam or final report. Prereq: C or better in Math 346. Sem hrs: 3 fall.

Math 470. Mathematical Physics. 3(1). An introduction to various mathematical topics needed in graduate-level physics and applied mathematics courses, including special functions (Legendre, polynomials, Bessel functions, etc.), calculus of variations, and series solutions of ordinary differential equations. Additional topics may include integral transform concepts (Fourier and Laplace transforms, Green's functions), linear algebra (function spaces, tensors), and complex functions (Laurent series, contour integration, and the Residue Theorem). Final exam or final report. Prereq: Math 346. Sem hrs: 3 spring of odd-numbered years.

Math 495. Special Topics. 3(1). Selected advanced topics in mathematics. Final exam or final report. Prereq: Department approval. Sem hrs: 3 fall or spring.

Math 499. Independent Study and Research. 3(0). Individual study and/or research under the direction of a faculty member. Oral midterm and final; final paper. Prereq: Department approval. Sem hrs: 3 fall or spring.

- Math 499A. Independent Study and Research. 2(0). Sem hrs: 2 fall or spring.
- Math 499B. Independent Study and Research. 1.5(0). Sem hrs: 1.5 fall or spring.
- Math 499C. Independent Study and Research. 1(0). Sem hrs: 1 fall or spring.

MECHANICAL ENGINEERING (Mech Engr)
Offered by the Department of Engineering Mechanics (DFEM)

Mech Engr 312. Thermodynamics. 3(1). Fundamental principles of classical equilibrium thermodynamics. Modeling of gas and fluid properties. Thermodynamic processes. Development and application of the first and second laws of thermodynamics to closed and open systems. Applications to power and refrigeration cycles, and introductory heat transfer. Final exam. Prereq: Engr Mech 220 and Math 243. Sem hrs: 3 fall.

Mech Engr 325. Engineering System Dynamics. 3(1). Modeling, analysis, and design of multidomain engineering systems including mechanical, electrical, hydraulic, thermal, and control elements. Models are developed based on tracking power interactions between system components. Mathematical models are developed in state space form and are investigated both analytically and numerically. System response to initial conditions and forcing functions is examined. Tools are introduced to predict system stability, behavior, and response to parameter variation. Non-linear models and elementary control systems are introduced. Final exam or final project. Prereq: Engr Mech 320, ECE 231, and Math 245. Sem hrs: 3 spring.

Mech Engr 341. Fluid Mechanics. 3(1). Description of fluid matter. Derivation of the governing equations. Application to hydrostatics, boundary layers, pipe flow, computational fluid dynamics, compressible flow, turbomachines, and pumps. Normal shocks and isentropic low. Final exam. Prereq: Engr Mech 220 and Mech Engr 312 or department approval. Coreq: Math 346. Sem hrs: 3 spring.

Mech Engr 370. Introduction to Machine Design. 3(1). Introduction to static failure theories and fatigue. Analysis and design of machine components including shafts, hydrodynamic and rolling element bearings, spur gears, clutches, brakes, and springs. Design of joints using screws, bolts, and welds. Emphasis on stress analysis and design trade-offs. Final exam or final project. Prereq: Engr Mech 320 and Engr Mech 330. Sem hrs: 3 spring.

Mech Engr 396. Mechatronics. 3(1). Cadets will learn the integration of mechanical and electrical design, applying the design process to develop an integrated electromechanical system autonomously controlled by a microprocessor. Electrical system development topics include digital logic, actuator control, sensor integration, and signal conditioning. Group design projects throughout the semester leading to the integrated final project. Open only to Engineering majors with Department of Engineering Mechanics approval. Final exam or final project. Prereq: 'B -' grade or higher in ECE 231. Sem hrs: 3 fall.

Mech Engr 441. Heat Transfer. 3(1). Study of thermal radiation, steady and transient conduction, laminar and turbulent convection, internal and external flow, boundary layers, and empirical correlations. Analytical and numerical solution techniques applied to selected problems. Applications address fins, heat exchangers, and interactive computing. Final exam. Prereq: Math 346 and Mech Engr 312. Sem hrs: 3 fall.

Mech Engr 467. Energy Conversion. 3(1). Applications of the first and second laws of thermodynamics to the major energy converters including steam plants, internal combustion

engines, and turbojet engines. Additional topics may include combustion analysis, energy storage, and refrigeration. Design project. Final exam or final project. Prereq: Mech Engr 312 or department approval. Sem hrs: 3 spring.

Mech Engr 468. Sustainable Energy. 3(1). Current and potential future energy systems are covered including resources, extraction, conversion, and application with sustainability as a major consideration. Different renewable technologies will be considered as possible replacements for more conventional energy technologies. Final project or final exam. Prereq: Mech Engr 312. Coreq: Mech Engr 341, or department approval. Sem hrs: 3 spring.

Mech Engr 490. Automotive Systems Analysis for the Engineer. 3(1). An analysis of the modern automobile as an engineering system. Engineering concepts applied to the design, maintenance, and integration of automotive subsystems. Analysis of power plants, clutches, transmissions, drive trains, suspension systems, steering and braking dynamics, and overall vehicle performance including economy. Final report or final exam. Field trip. Coreq: Engr Mech 320 or department approval. Sem hrs: 3 fall.

Mech Engr 491. Capstone Design Project I. 3(2). Capstone engineering design experience for the Mechanical Engineering major. Emphasis placed on the design process, complete analysis, and technical communication in the creative development of a mechanical system. The system is designed, fabricated, and tested against performance specifications determined by faculty members. Final report. Prereq (required for all): C1C standing and team advisor approval. Prereq (required for Mech Engr majors): Engr Mech 320, Engr Mech 330, Engr Mech 350, Mech Engr 312, and Mech Engr 341. Coreq (required for Mech Engr majors): Engr Mech 460. Majors outside of DFEM programs are welcome on a case-by-case basis. Waiver authority is the DFEM Deputy for Curriculum. Sys Engr majors do not require waivers but must have capstone design team advisor approval. Sem hrs: 3 fall.

Mech Engr 492. Capstone Design Project II. 3(2). Capstone engineering design experience for the Mechanical Engineering major. Emphasis placed on the design process, complete analysis, and technical communication in the creative development of a mechanical system. The system is designed, fabricated, and tested against performance specifications determined by faculty members. Final report. Prereq (required for all): C1C standing and team advisor approval. Prereq (required for Mech Engr majors): Engr Mech 320, Engr Mech 330, Engr Mech 350, Mech Engr 312, Mech Engr 341, and Engr Mech 460. Majors outside of DFEM programs are welcome on a case-by-case basis. Waiver authority is the DFEM Deputy for Curriculum. Sys Engr majors do not require waivers but must have capstone design team advisor approval. Sem hrs: 3 spring.

Mech Engr 499. Independent Study. 3(0). Individual study, research, or design on a topic established with the approval of the Department Head. If the cadet performs exceptionally well (as determined by the Research Mentor and Department Head), Mech Engr 499 credit can be awarded for a successful Cadet Summer Research Program also meeting the Mech Engr Option II requirement of the Mechanical Engineering program. Prereq: Departmental approval of USAFA Form 0-498 prior to enrollment. Final report. Sem hrs: 3 fall or spring.

- Mech Engr 499A. Independent Study. 2(0). Sem hrs: 2 fall or spring.

- Mech Engr 499B. Independent Study. 1.5(0). Sem hrs: 1.5 fall or spring.
- Mech Engr 499C. Independent Study. 1(0). Sem hrs: 1 fall or spring.

METEOROLOGY (Meteor)

Offered by the Department of Economics and Geosciences (DFEG) and the Department of Physics (DFP)

Meteor 320. Introduction to Meteorology and Aviation Weather. 3(1). A survey course in the fundamentals of meteorology. Emphasis will be placed on flight weather and its impact on aviation. Topics include atmospheric thermodynamics, cloud physics, air masses and weather systems, weather forecasting, severe weather, hazards to aviation, introduction to weather satellites and radar, and an introduction to the near-earth space environment. Administered by the Department of Physics. Final exam. Prereq: Physics 110. Sem hrs: 3 fall or spring.

Meteor 325. Weather Data, Analysis and Quantitative Methods. 3(1). An introduction to the data sources, objective and subjective data analysis techniques, and quantitative methods used in meteorology. Topics include conventional surface and upper air data, fundamentals of radar and satellite observations, weather map analysis, and quantitative methods covering partial derivatives, vector analysis, kinematic properties of fluid flow, Lagrangian and Eulerian frames of reference, and numerical integration and differentiation. Practical application of the above quantitative techniques to weather charts and vertical atmospheric soundings are emphasized. Administered by the Department of Economics and Geosciences. Final exam. Prereq: Math 243 (or Math 253) and Meteor 320. Sem hrs: 3 fall.

Meteor 330. Physical Meteorology I. 3(1). Classical thermodynamics applied to both the dry and moist atmosphere. Topics include atmospheric composition and structure, thermodynamic systems and variables, the gas laws, atmospheric pressure, the first and second laws of thermodynamics, moist processes in the atmosphere, latent and sensible heat in the atmosphere, atmospheric stability, and thermodynamic diagrams. Administered by the Department of Physics. Final exam. Prereq: Math 243 (or Math 253) and Meteor 320. Sem hrs: 3 fall.

Meteor 331. Physical Meteorology II. 3(1). Atmospheric radiation and optics, cloud and precipitation physics, and atmospheric electricity. Topics include the spectrum of radiation, blackbody radiation, transmission, absorption and emission of radiation in the atmosphere, scattering of radiation in the atmosphere, radiation fluxes and heating rates in the atmosphere, atmospheric aerosols, nucleation of water vapor condensation, warm cloud processes, cold cloud processes, thunderstorms, and atmospheric electricity. Administered by the Department of Physics. Final exam. Prereq: Meteor 330. Sem hrs: 3 spring.

Meteor 352. Climatology. 3(1). An introduction to climatology, including fundamental, long-term processes involving energy, moisture, and momentum transfer in the earth's climate system. Topics include understanding current world climate patterns and climate change, and applying climatology to enhance human activities. Administered by the Department of Economics and Geosciences. Final exam. Prereq: Meteor 320 or Geo 351. Sem hrs: 3 spring.

Meteor 430. Atmospheric Dynamics I. 3(1). An advanced course in atmospheric dynamics.

Topics include continuity, thermodynamic energy, the equations of motion, hydrostatic balance, generalized vertical coordinate systems, balanced and unbalanced flows, circulation, vorticity and potential vorticity, and quasigeostrophic theory. Administered by the Department of Physics. Final exam. Prereq: Math 245, Meteor 325, and Meteor 330. Sem hrs: 3 spring.

Meteor 431. Atmospheric Dynamics II. 3(1). Advanced applications of atmospheric dynamics. Topics include advanced quasi-geostrophic applications, baroclinic instability, cyclogenesis, fronts and frontogenesis, atmospheric wave theory and behavior, boundary layer physics, and numerical weather prediction. Administered by the Department of Physics. Final exam. Prereq: Meteor 430. Sem hrs: 3 fall.

Meteor 440. Weather Analysis and Forecasting. 3(1). A laboratory course emphasizing the use of meteorological observations, analyses and numerical model output to characterize the structure and evolution of tropical cyclones and extratropical weather systems. Particular attention is given to translating this understanding of weather systems into forecasts of important weather parameters at given locations over a period of a few days. Administered by the Department of Economics and Geosciences. Final exam. Prereq: Meteor 430. Coreq: Meteor 431 and Meteor 451. Sem hrs: 3 fall.

Meteor 451. Synoptic Meteorology. 3(1). Study of the development and evolution of large-scale weather systems, including surface and upper level pressure, temperature and wind patterns, air masses, fronts, extratropical cyclones and jet streams. Administered by the Department of Economics and Geosciences. Final exam. Prereq: Meteor 325 and Meteor 330. Coreq: Meteor 431 and Meteor 440. Sem hrs: 3 fall.

Meteor 452. Mesoscale Meteorology. 3(1). Study of the structure, development, and evolution of mesoscale weather systems. Topics include fronts and jet streaks, instabilities, gravity waves, convective storms, squall lines, tornadoes, and mesoscale convective complexes. Introduction to analysis techniques and nowcasting. Extensive use of real-time satellite and Doppler radar data and numerical forecast products in meteorological laboratory. Administered by the Department of Economics and Geosciences. Final exam. Prereq: Meteor 440 and Meteor 451. Sem hrs: 3 spring.

Meteor 490. Meteorological Interpretation, Analysis, and Integration. 3(2). Capstone course in meteorology. Using real-world scenarios, this course assesses the cadet's ability to integrate and synthesize a wide range of meteorological information to include observational data, analyses, and operational forecasts. Particular attention will be given to weather support for military operations. Administered jointly by the Department of Physics and the Department of Economics and Geosciences. Final project. Prereq: C1C standing. Sem hrs: 3 spring.

Meteor 499. Independent Study. 3(0). Individual research under direction of a faculty member. Research paper or final project. Prereq: Department approval. Sem hrs: 3 fall or spring.

- Meteor 499A. Independent Study. 2(0). Sem hrs: 2 fall or spring.
- Meteor 499B. Independent Study. 1.5(0). Sem hrs: 1.5 fall or spring.
- Meteor 499C. Independent Study. 1(0). Sem hrs: 1 fall or spring.

MILITARY & STRATEGIC STUDIES (MSS)

Offered by the Department of Military & Strategic Studies (DFMI))

MSS 200. Air, Space, and Cyberspace Power. 3(1). Provides cadets the professional military cornerstone for development as an Air Force officer through independent, critical military thinking. Drawing on a wide range of relevant military thought, cadets scrutinize theories of warfare and approaches to strategy, adaptively formulating and applying concepts in contemporary and notional contexts. This course seeks to develop Air Force leaders who can form creative solutions to complex problems. Final exam. Prereq: None. Sem hrs: 3 fall or spring.

In addition, this course/program is a primary contributor to the development and assessment of the following USAFA outcomes:

Skills: Decision Making, Teamwork

Knowledge: Heritage and Application of Air, Space, and Cyberspace Power; National Security & Full Spectrum of Joint & Coalition Warfare

MSS 360. Comparative Air Forces. 3(1). The seminar uses a comparative approach to analyze why contemporary air forces operate as they do. To that end, the course examines the institutional behavior of selected air forces in terms of approaches to internal organization, strategy formulation, and execution. Special emphasis will be given to the interconnections among theories, technologies, combat experience, evolving doctrine, force structure, service culture, and military leadership. The course relies heavily on the use of case method to illustrate key concepts. Final project or exam. Prereq: MSS 200. Sem hrs: 3 spring.

MSS 362. Military Innovation and Transformation. 3(1). Military strategy, operations, and theory reflect efforts to shape institutions, ideas, and organizations. Armed forces are involved in various processes of invention, innovation, and potentially transformation to meet emerging threats. Cadets develop and apply critical inquiry to comprehend complexities of innovation and transformation during peacetime and wartime. Case studies of American and foreign military change are examined to evaluate processes of successful—and failed—military innovations and their relationship to service transformation. Final paper. Prereq: None. Sem hrs: 3 fall.

MSS 363. Irregular Warfare and Armed Groups. 3(1). Examines the challenges armed groups employing irregular warfare strategies pose to the US and its allies. Cadets will explore and evaluate alternative approaches for meeting these diverse threats and consider frameworks for analyzing the complex strategic challenges associated with armed groups and irregular warfare. Final paper or final exam. Prereq: None. Sem hrs: 3 fall.

MSS 365. Developing the Air Force Strategist. 3(1). Develops foundational knowledge and thinking skills for contemporary challenges facing Air Force strategists. Cadets explore propositions of air, space, and cyberspace power, doctrine and theory, examine alternative approaches to the conceptualization and employment of military strategic power, and consider current and emerging Air Force capabilities and requirements. Final exam or final paper. Prereq: None. Sem hrs: 3 spring.

MSS 367. Weapons of Mass Effect (WME). 3(1). The seminar examines how the military element of national power integrates all domains to counter and/or deploy weapons of mass effect through deterrent, offensive, and defensive operations to achieve desired objectives. This seminar studies the strategies and weapons of WME, as well as the combined effects of other weapons including cyber. Final project or exam. Prereq: MSS 200. Sem hrs: 3 spring.

MSS 379. Research Methods in Military & Strategic Studies. 3(1). Introduce and explain research methods and their application to Military & Strategic Studies. Provide the foundation for a range of qualitative and quantitative research designs, tools, processes and resources to analyze military issues including strategy, theory, doctrine, force structure, and operations. The seminar director will assign each cadet a faculty thesis advisor to provide additional research mentorship. This course will conclude with a final paper that will be developed into a thesis in the MSS 498 Capstone Thesis in Military & Strategic Studies course. Prereq: None. Sem hrs: 3 fall.

MSS 385. Special Operations. 3(1). This course is designed to educate future airmen regarding the capabilities, limitations, and potential for employing special operations forces (SOF) at the operational and strategic levels. In addition, the course will develop critical thinking skills by requiring analysis, problem-solving, and the application of theoretical concepts to real-world situations. It traces the evolution of SOF capabilities and evaluates the reasons behind successes and failures. A number of case studies are incorporated for comparison with contemporary operations and introduction of a common framework. Final paper. Prereq: None. Sem hrs: 3 spring.

MSS 410. Joint Operations Strategy and ISR Integration. 3(1). Cadets learn to integrate intelligence, surveillance, and reconnaissance (ISR) ends, ways, and means with other operations to shape combined effects. Cadets practice intellectual initiative and mission versatility in contemporary operating environments with asymmetric threats, non-linear relationships, adaptive networks, and pervasive uncertainty. MSS 410 is the MSS major core substitute for MSS 415/16. Final project. Prereq: MSS 200 and MSS 365. Sem hrs: 3 fall.

In addition, this course/program is a primary contributor to the development and assessment of the following USAFA outcomes:

Skills: *Critical Thinking, Decision Making, Teamwork*

Knowledge: *National Security & Full Spectrum of Joint & Coalition Warfare; Civic, Cultural, and International Environments*

MSS 415. Joint Operations Strategy and Technology. 3(1). This seminar course focuses on strategic military assumptions, processes, and interactions across and within regions of interest to the United States military. Cadets evaluate current and emerging operational environments in Combatant Command Areas of Responsibility, developing requisite knowledge, analytical, and decision-making skills. Cadets apply the capabilities of all U.S. military services across domains, illustrating strategy, doctrine, technology, and service culture within diverse threat contexts. The course integrates special operations and coalition forces and includes joint/coalition/interagency operational simulations. Emphasis is on teamwork. Final exam and/or final paper. Prereq: MSS 200. Sem hrs: 3 fall or spring.

In addition, this course/program is a primary contributor to the development and assessment of the following USAFA outcomes:

Skills: *Critical Thinking, Decision Making, Teamwork*
Knowledge: *National Security & Full Spectrum of Joint & Coalition Warfare; Civic, Cultural, and International Environments*

MSS 415S. Joint Operations Strategy in Global Contexts. 3(1). This course is the Scholar's version of the MSS 415/416 course. Cadets scrutinize global challenges and regional dynamics faced by the U.S. military, critically evaluate contemporary debates through the application of strategic concepts, and examine means of recalibrating the joint force in complex operating environments. Final exam or final paper. Prereq: MSS 200 and Scholar status. Sem hrs: 3 spring.

In addition, this course/program is a primary contributor to the development and assessment of the following USAFA outcomes:

Skills: *Critical Thinking, Decision Making, Teamwork*
Knowledge: *National Security & Full Spectrum of Joint & Coalition Warfare; Civic, Cultural, and International Environments*

MSS 416. Joint Operations Strategy in Regional Contexts. 3(1). This seminar course focuses on strategic military assumptions, processes, and interactions across and within U.S. military operational domains. Within the context of contemporary and emerging strategic technologies and service attitudes toward technology and its operational effects, cadets evaluate current and emerging operational environments, developing requisite knowledge, analytical, and decision-making skills. Cadets apply the capabilities of U.S. military services across domains, illustrating strategy, doctrine, technology, and service culture within diverse threat contexts. The course integrates special operations and coalition forces and includes joint/coalition/interagency operational simulations. Emphasis is on teamwork. Final exam and/or final paper. Prereq: MSS 200. Sem hrs: 3 fall or spring.

In addition, this course/program is a primary contributor to the development and assessment of the following USAFA outcomes:

Skills: *Critical Thinking, Decision Making, Teamwork*
Knowledge: *National Security & Full Spectrum of Joint & Coalition Warfare; Civic, Cultural, and International Environments*

MSS 450. Toward New Horizons in Military and Strategic Power. 3(1). This seminar examines the strategic environment of two decades hence, focusing cadets on specific problem sets for which to seek solutions, be they technological, institutional, ideational, cultural, or combinations thereof. Cadets develop a deep understanding of 1) the problems the military will face during their careers; 2) potential solutions to those problems; and 3) pathways to marrying resources to objectives and strategy. Cadets apply concepts of military innovation to present capabilities of US military services across domains, illustrating strategy, theory, technology, and service culture within diverse threat contexts. Final project or exam. Prereq: None. Sem hrs: 3 fall.

MSS 470. Information and Cyberspace Operations. 3(1). This course examines Information Operations and Cyberspace capabilities and strategies by means of a thorough study of Influence Operations, Network Warfare Operations, and Electronic Warfare Operations. An analysis will

be made of the current and emerging influence of Information Operations on force structure, strategy, and operational capabilities together with an assessment of the crucial role of information dominance across the spectrum of war. Final paper or final project. Prereq: MSS major or departmental approval. Sem hrs: 3 spring.

MSS 477. Airpower for Combined Effects. 3(1). Cadets relate air campaign planning and airpower strategy and operational concepts in robust scenarios. Content includes weapons platforms, sensors and munitions, as well as roles, missions, and types of manned and unmanned aerial warfare in contemporary operating environments. Cadets adaptively plan and adjust air operations to combine effects in multiple simulations. Final paper. Prereq: MSS 200 and department approval. Sem hrs: 3 spring.

MSS 480. Operational Art in Surface Warfare. 3(1). This course examines theory, war as art and science, major paradigms, and laboratory applications in contemporary contexts. Cadets study strategy and operational concepts in land and maritime warfare, the role of professional staffs, and power projection. Emphasis is on current challenges exercised via laboratory simulations requiring original solutions. Cadets develop mental agility to adapt to complex operating environments. Final project or exam. Prereq: MSS 200. Sem hrs: 3 fall.

MSS 485. Space as an Element of National Power. 3(1). Seminar discusses conceptual frameworks to understand the context, theory, and application of space as an element of national power. Cadets contextually understand the intellectual foundations of space strategy and theory for American and foreign space powers. Contemporary and notional future space capabilities are also addressed. Cadets explore selected concepts and capabilities in the Space Operations Education Lab. Final project or final paper. Prereq: None. Sem hrs: 3 spring.

MSS 490. Military Strategies of Asia and the Pacific. 3(1). Seminar focused on strategic military assumptions, processes, and interactions in the region. Comprehend current and emerging military operational environments in the United States Pacific Command (USPACOM) Area of Responsibility (AOR), develop regional knowledge and analytical skills, and practice decision-making in realistic scenarios. This AOR primarily comprises India, Australia, East Asia, and the Pacific. Regional context will include selected threats, concepts, and issues related to contemporary military strategy. Final paper or final exam. Prereq: None. Sem hrs: 3 spring of even-numbered years.

MSS 491. Military Strategies of the Western Hemisphere. 3(1). Seminar examines the strategic and operational environments of North, Central, and South America. Cadets will comprehend current and potential strategic challenges, develop regional knowledge and analytical skills, evaluate the emergence of future threats and strategies for addressing them, and practice decision-making in realistic scenarios. Regional context will include consideration of strategic vulnerabilities and selected threats, concepts, and issues related to contemporary military strategy. Final project or exam. Prereq: MSS 200. Sem hrs: 3 spring of odd-numbered years.

MSS 493. Military Strategies of Europe and Russia. 3(1). Seminar focused on strategic military assumptions, processes, and interactions in the region. Comprehend current and emerging operational environments in the United States European (USEUCOM) Area of Responsibility

(AOR), develop regional knowledge and analytical skills, and practice decision-making in realistic scenarios. This AOR primarily comprises Europe, Russia, Turkey, and Israel. Regional context will include selected threats, concepts, and issues related to contemporary military strategy. Final paper or final exam. Prereq: None. Sem hrs: 3 fall of even-numbered years.

MSS 494. Military Strategies of Africa and the Greater Middle East. 3(1). Seminar examining the strategic and operational military environments of the Middle East, Central Asia, and Africa. Comprehend current and potential strategic challenges, develop regional knowledge , and analytical skills, evaluate the emergence of future threats and counter-strategies, and practice decision-making in realistic and notional scenarios. Regional context will include consideration of strategic vulnerabilities and selected threats, concepts and issues related to contemporary military strategy. Final project or final exam. Prereq: MSS 200. Sem hrs: 3 fall of odd-numbered years.

MSS 495. Special Topics. 1-3(1). Selected topics related to military doctrine, operations and strategy. Prereq: department approval. Sem hrs: 1-3 fall or spring

MSS 498. Capstone Thesis in Military & Strategic Studies. 3(1). This course culminates the Military & Strategic Studies curriculum, integrating previous coursework to contribute knowledge to the context, theory, and application of military & strategic power. Based upon the cadet research topic selected in the prerequisite MSS 379, students work with a selected faculty advisor. Cadets either produce a major paper for publication or create a Cadet Battlelab simulation or exercise designed to research a thesis, evaluate the findings, and present a paper on the results. Approval for the battlelab simulation is based upon the Cadet's research topic. Final Paper. Prereq: MSS 379. Sem hrs: 3 spring.

MSS 499. Independent Study. 3(0). Individual study and/or research under the direction of a DFMI instructor. No final. Prereq: Department approval. Sem hrs: 3 fall or spring.

- MSS 499A. Independent Study. 2(0). Sem hrs: 2 fall or spring.
- MSS 499B. Independent Study. 1.5(0). Sem hrs: 1.5 fall or spring.
- MSS 499C. Independent Study. 1(0). Sem hrs: 1 fall or spring.

MILITARY TRAINING (Mil Tng)

Offered by the Training Support Directorate (USAFA/CWT)

Mil Tng 100. Basic Cadet Training (BCT). 0(0). Student Course. BCT is a 5 1/2-week transition period from civilian to military life. Indoctrination of the overall Academy program: cadet regulations, the Honor Code, manual of arms, drill, customs and courtesies, introduction to basic Air Force weapons, a field encampment, and other general military subjects. This course is a graduation requirement. Pass/fail. No final. Coreq: Phy Ed 100. Sem hrs: 0 summer.

In addition, this course/program is a primary contributor to the development and assessment of the following USAFA outcomes:

Skills: Stamina, Courage, Discipline

Knowledge: Heritage and Application of Air, Space, and Cyberspace Power; Ethics and the Foundations of Character

Mil Tng 201. Operation Air Force Program (OpsAF-3Lt). 0(0). Student Course. This three week program is conducted at Air Force installations worldwide. Cadets will learn the roles, responsibilities, and expectations of second lieutenants. Each cadet will understand the Air Force organization and gain a broad officer perspective in both support and operational squadrons. This course is a graduation requirement. AETC leadership and Civil Engineering—Field Engineering Research Lab (CE-FERL) are substitute courses that fulfill the graduation requirement. Pass/fail. Debrief/critique serves as final. Sem hrs: 0 summer.

Mil Tng 202. Operation Air Force Staff. 0(0). Selected cadets will assist the Operation Air Force CICs with managing all aspects of the Operation Air Force program to include: administrative support, transportation arrangements, dormitory management, cadet accountability, and base program manager coordination. This course is only offered to prior enlisted cadets that do not require Mil Tng 101. Pass/fail. Sem hrs: 0 summer.

Mil Tng 205. Wing Summer Support. 0(0). Third-class cadets assigned to prepare facilities and resources for summer programs. Pass/fail. No final. Sem hrs: 0 summer.

Mil Tng 233/234/235/236. Admin Squadron. 0(0). Cadets in a temporary hold for either the Physical Education Review Committee (Mil Tng 234), the Academic Review Committee (Mil Tng 235), the Military Review Committee (Mil Tng 236), or for some other purpose (Mil Tng 233). Pass/fail. Sem hrs: 0 summer.

Mil Tng 270. Expeditionary, Survival, and Evasion Training. 0(0). Third-class cadets are trained in joint expeditionary skills with a primary focus is to help our Cadets establish a Strong Warrior Ethos with USAF Tier 1 Expeditionary Skills Training (EST) while also providing them a solid foundation for the knowledge, skills and abilities to prepare to survive, operate, and succeed in a field environment. The program and includes field exercises in AFDD 1, *Air Force Basic Doctrine*, demonstrating Air Force operational functions. The course fulfills USAF Tier 1 EST accession requirements per AFI 36-2201, *Air Force Training Program* and is a USAFA graduation requirement. Pass/fail. Sem hrs: 0 summer.

Mil Tng 300. Operation Air Force Program (International Students). 0(0). Student Course. This three week program is conducted by the international student's home country. Pass/fail. Sem hrs: 0 summer.

Mil Tng 301. Operation Air Force Program (OpsAF-Brevet Lt-Deployed). 0(0). Student Course. This three week program is conducted at Air Force installations worldwide. Cadets will learn the roles, responsibilities, and expectations of company grade officers in an AFSC focused program. Each cadet will understand the Air Force organization and have an effort focused on learning what a specific AFSC duty entails. OpsAF-Brevet Lt Deployed exposes selected cadets to AEF concepts through deployment to a Combatant Command's AOR. This exposure is anywhere from three to six weeks in duration. Each cadet will understand the Expeditionary Wing contribution to the Combatant Commander's mission and will be indoctrinated into the mobility readiness and deployment line process. Select CSRP activities can substitute for the Mil Tng 301 OpsAF requirement. Pass/fail. Debrief/critique serves as final. Sem hrs: 0 summer.

Mil Tng 302. Navy Programs. 0(0) Student Course. First-class cadets volunteer for various Navy training courses. Specific courses will vary from summer to summer. Programs are two to three weeks in length. Pass/fail. Sem hrs: 0 summer.

Mil Tng 303. Army Airborne. 0(0). Student Course. First- and second-class cadets volunteer for Army Airborne training courses. Training is conducted at an army location by U.S. Army personnel. Pass/fail. Sem hrs: 0 summer.

Mil Tng 304. Army Air Assault. 0(0). Student Course. First- and second-class cadets volunteer for Army (Air Assault) training courses. Training is conducted at an army location. Program is two weeks in length. Pass/fail. Sem hrs: 0 summer.

Mil Tng 305. Marine Bulldog. 0(0). Student Course. First- and second-class cadets volunteer for Marine training. The program is two to three weeks in length. This program is a prerequisite to cross commissioning to the Marine Corps Pass/fail. Sem hrs: 0 summer.

Mil Tng 307. BSA Philmont Ranger. 0(0). Career Broadening. Positions at Philmont Scout Ranch in Cimarron, New Mexico, as rangers or instructors in the staff camp areas. Pass/fail. Sem hrs: 0 summer.

Mil Tng 309. Prep School BCT Cadre. 0(0). Cadets serve as cadre for USAFA Prep School basic training. Pass/fail. Sem hrs: 0 summer.

Mil Tng 313. AF Special Tactics Orientation. 0(0). Student Course. Introduce cadets to Special Tactics history, missions, and career field specific skills. Students are required to participate in a rigorous physical fitness program that introduces them to physical exercises that are conducted during the pipeline. The course includes the following events: running, swimming, calisthenics, weight training, sports nutrition, sports medicine, and Combat Control related skills. Pass/fail. Sem hrs: 0 summer.

Mil Tng 315. Training Wing Operations Center (TWOC). 0(0). Military Leadership. Staff is responsible for manning the center 24 hours a day. Duties include maintaining wing locator information, emergency procedures notification, and information dissemination. Pass/fail. Sem hrs: 0 summer.

Mil Tng 332. Summer Seminar. 0(0). Career Broadening. Summer Seminar's purpose is to attract and inspire diverse, highly-qualified candidates to pursue Academy appointments by actively engaging them in substantive and representative USAFA experiences. Cadets serve as leaders and counselors for 1125 high school students from all 50 states and around the world. During the three, 5-day sessions students are housed in Vandenburg Hall and fed at Mitchell Hall. Students experience cadet life through military briefings and demonstrations, academic workshops, character workshops, physical training sessions, intramurals, and a "Doolie for a Day" exercise. This program is first period only. Pass/fail. Sem hrs: 0 summer.

Mil Tng 351. Civil Engineering Field Engineering and Readiness Lab (FERL) Leadership. 0(0). Military Leadership. C1C Civ Engr or Env Engr cadets selected by the Department of Civil and

Environmental Engineering serve as Squadron Commander, Chief of Operations, Flight Commanders, and Logistics Officers for Civ Engr 351. Cadets lead second-class students through hands-on engineering/construction activities, a variety of team building activities, and field trips. Flight Commanders deploy with students to active duty AF installations on Operation Civil Engineering Air Force (OpsCEAF). Logistics Officers and leadership cadre prepare site and activities at the Field Engineering and Readiness Laboratory (FERL) for Civ Engr 351. Pass/fail. Sem hrs: 0 summer.

Mil Tng 352. SAME/USAFA Engineering and Construction Camp Cadre (CE-SAME). 0(0). Career Broadening. C1C Civ Engr or Env Engr cadets selected by the Department of Civil and Environmental Engineering serve as Flight Commanders for high school students during the second summer period at the Field Engineering and Readiness Laboratory (FERL) complex in Jack's Valley. Cadets lead the students through a variety of team building activities/competitions, hands-on engineering/construction activities, and field trips. Cadets prepare site and activities prior to camp while leading and mentoring their students during the camp. Pass/fail. Sem hrs: 0 summer.

Mil Tng 370. Expeditionary, Survival, and Evasion Training (Cadre). Mil Tng 370 cadets form into a Training Group, responsible for four squadrons (Base Training Squadron, Survival Training Squadron, Evasion Training Squadron, and Student Squadron). Leadership positions include commander, deputy commander, flight leader, element leader, element instructor, superintendent, first sergeant, and other non-commissioned officer positions. Cadets lead the Mil Tng 270 program under the guidance of CW and AETC assigned and augmented personnel. Topics include: Tier 1 and Tier 2 expeditionary skills, global aspects of survival and evasion, the application of the code of conduct, and approximately one week of field training. Pass/fail. Sem hrs: 0 summer.

Mil Tng 400/402. Basic Cadet Training Cadre. 0(0). Military Leadership. Leadership positions as instructors, officers or NCOs in the cadet chain of command during Basic Cadet Training. Some areas include: Combat Arms Training, Obstacle Course, Assault Course, Confidence Course, Self-Aid/Buddy Care, Leadership Reaction Course, and Ground Combat Familiarization course. Mil Tng 400 refers to 1st BCT during 2nd summer period. Mil Tng 402 refers to 2nd BCT during 3rd summer period. Pass/fail. Sem hrs: 0 summer.

Mil Tng 401. Operation Air Force Group Staff. 0(0). Military Leadership. Selected cadets will assist the Operation Air Force Program Manager with managing all aspects of the Operations Air Force program to include: administrative support, transportation arrangements, dormitory management, cadet accountability, and base program manager coordination. Pass/fail. Sem hrs: 0 summer.

Mil Tng 403. Basic Cadet Training Group Staff. 0(0). Military Leadership. Cadet officer and NCO group leadership positions maintaining command, control, and accountability for Basic Cadet Training. Pass/fail. Sem hrs: 0 summer.

Mil Tng 404. Air, Space, and Cyber Group. 0(0). Career Broadening. Cadet officer and NCO leadership positions maintaining command, control, accountability, and providing billeting for all cadets involved in summer Aviation courses. Pass/fail. Sem hrs: 0 summer.

Mil Tng 405. Wing Summer Support. 0(0). Upper-class cadets assigned to prepare facilities and resources for summer programs. Pass/fail. Sem hrs: 0 summer.

Mil Tng 407. Mission Support Group. 0(0). Career Broadening. Cadet Officer and NCO leadership positions maintaining command, control, and accountability. Provide billeting for all cadets taking summer academic courses, Summer Seminar, Sports Camp, and transient cadets using cadet area facilities. Pass/fail. Pass/Fail. Sem hrs: 0 summer.

Mil Tng 408. Sports Camp. 0(0). Career Broadening. 1° cadets accepted by the Athletic Department program manager to work sports camps during the first summer period. Pass/fail. No final. Sem hrs: 0 summer.

Mil Tng 411. AETC Leadership. 0(0). Military Leadership. Leadership positions with a Basic Military Training Squadron at Lackland AFB, TX, as assistants to Military Training Instructors and as basic airmen training instructors and counselors. AETC Leadership meets the requirements for a military training leadership program and for Operation Air Force. Cadets cannot be scheduled for Operation Air Force after completing AETC Leadership. Pass/fail. Sem hrs: 0 summer.

Mil Tng 412. Falconry. 0(0). Career Broadening. Train recently hatched falcons for upcoming football season performances, train falcons on hand, public relations work, and assist in renovations/repairs of mews and equipment. Only cadet falconers are eligible. Pass/fail. Sem hrs: 0 summer.

Mil Tng 418. Cadet EMT. 0(0). Career Broadening. Cadets perform as EMTs to fulfill summer program requirements for medical first responders. Pass/fail. Sem hrs: 0 summer.

Mil Tng 435. Cadet Wing Leadership. 0(0). Military Leadership. Selected cadets will perform in Cadet Wing Command functions managing all aspects of the Cadet Wing to include: Wing Commander, Deputy Commander, Superintendent, Director of Operations, and Leadership Staff. Pass/fail. Sem hrs: 0 summer.

Mil Tng 441. Cadet Summer Language Immersion Program (CSLIP). 0(0). DF Coordinated Program. This is an intensive foreign language and cultural study program at an accredited foreign university or language institute. USAFA currently sends eligible cadets to immersion programs in the Middle East, China, Russia, Japan, France, Germany, Spain, and Latin America. All third-class or second-class foreign language students are eligible to apply for the program, but preference is given to Arabic, Chinese, and Russian students. The program runs for four weeks, from Graduation Week through the end of the first summer period; participation is in lieu of leave. Participation in CSLIP provides cadets with across-the-board significant improvement in language skills and cultural understanding, as well as the ability to function with confidence in international/foreign environments. Pass/fail. Sem hrs: 0 summer.

Mil Tng 442. Olmsted Foundation Language and Cultural Immersion Program. 0(0). Provides unique cultural and language learning opportunities for USAFA faculty, staff, and cadets to

develop and submit their own proposals to study specific international issues, cultures, histories, and languages in a variety of foreign countries around the world. Like CSLIP, preference is given to proposals to travel to the Middle East/Africa, China, and Russia; each proposal must have a strong foreign culture and foreign language component as its primary focus. Approximately 7 to 10 proposals (30 to 40 cadets) are approved from over 25 submitted each year; most travel takes place during Graduation Week through the end of the first summer period. This program is in lieu of leave. Pass/fail. Sem hrs: 0 summer.

Mil Tng 444. Summer Leave. 0(0). Summer leave. No Military Training credit. Sem hrs: 0 summer.

Mil Tng 446. Special Leave. 0(0). First-, second-, and third-class cadets requiring leave at a certain time during the summer. Examples include: third-class football players and cadets requiring leave for weddings or other special occasions. All requests for special leave will be submitted to CWTS by 15 January for consideration. No Military Training credit. Sem hrs: 0 summer.

Mil Tng 447. Medical Leave. 0(0). First-, second-, and third-class cadets requiring leave at a certain time for scheduled medical operations or when sent home on recuperative leave. No Military Training credit. Sem hrs: 0 summer.

Mil Tng 451. Honor Staff. 0(0). Career Broadening. First- and second-class cadets who teach honor lessons to basic cadets and process honor cases during the summer. Pass/fail. Sem hrs: 0 summer.

Mil Tng 452. Media Staff. 0(0). Career Broadening. First- and second-class cadets selected for cadet-in-charge (CIC) duty for media. Pass/fail. Sem hrs: 0 summer.

Mil Tng 48X. Summer Research. 0(0). This course is a DF coordinated summer research program for firsties. This course consists of 33-36 days conducting a research project usually in the cadet's major area of study. Operation Air Force credit may be provided if the cadet spends at least 2 weeks at a location engaged in activities typical of varied DoD operations and functions to include interaction with Air Force officers. Cadets are selected by their academic advisor and applicable academic department and may receive independent study credit with department approval. Summer Research programs are coordinated with CWT to ensure appropriate scheduling, training credit, and support. 6 course options are listed below. Pass/fail. Sem Hrs: 0 summer.

Mil Tng 481. Summer Research with Partial Leave. 0(0). This option begins the day after graduation (1st summer period) and ends partway into the second period of summer. This option is in lieu of a full second period summer leave. NOTE: This option can begin second period and end partway through the third period with appropriate CW and DF coordination. Mil Tng 481 can be scheduled for 21 days and support a full summer leave period with academic departmental approval. Pass/fail. Sem hrs: 0 summer.

Mil Tng 482. Summer Research with Leave. 0(0). This course begins after finals and runs through the first summer period. Travel funding must be provided for the cadet to return to USAFA for the graduation ceremony. Pass/fail. Sem hrs: 0 summer.

Mil Tng 483. Local Summer Research with Leave. 0(0). This course option begins after finals and proceeds through to the end of the first summer period. Significant augmentation by DoD/agency scientific or acquisition organizations are required to attain credit for Operation Air Force. Pass/fail. Sem hrs: 0 summer.

Mil Tng 484. Two-Phase Summer Research with Leave. 0(0). Phase one begins at USAFA after finals with a DF mentor and ends the day before graduation. Phase two begins the day after graduation at a research location and ends at the end of the first summer period. Pass/fail. Sem hrs: 0 summer.

Mil Tng 485. Summer Research Over Graduation Activities. 0(0). Under special circumstances and with USAFA/CC approval, a cadet may spend 38 days on a national level research project at a research location. This option begins after finals and concludes with the first summer period. Pass/fail. Sem hrs: 0 summer.

Mil Tng 486. Summer Research Leadership with Leave. 0(0). Under special circumstances USAFA/CC may authorize cadets to participate in national level research projects for 41-43 days at a research location. This option occurs during two summer periods. Pass/fail. Sem hrs: 0 summer.

Mil Tng 492. Military Strategic Studies Application Laboratories. 0(0). DF Coordinated Program. Cadet Air and Space Instructors use a number of educational laboratories such as available aircraft, Air Warfare Laboratory simulators, aviation flight training devices, and the Space Education Laboratory. Cadets interact with visiting dignitaries such as congressional delegations, high school and university counselors, and General Officers. In addition, cadets host the air and space application portions of Summer Seminar, conduct integrated field studies, teen aviation camp, space camp, and ROTC summer visitations. Prereq: Department of Military Instruction approval. Pass/fail. Sem hrs: 0 summer.

Mil Tng 499. Internship. 0(0). DF Coordinated Program. 1° cadets work special research/internships at various TDY locations or on USAFA. These are individual programs structured for each cadet enrolled. The program may be scheduled for any one of the three summer periods. Internships may be longer than three weeks. Examples of such programs are the Georgetown and Washington Internship programs. Pass/fail. Sem hrs: 0 summer.

SmrAcad 700. Summer Academic Placeholder. 0(0). DF Coordinated Program. SmrAcad 700 is the generic placeholder to reserve a specific summer period for future enrollment in a specific summer academic course. Sem hrs: 0 summer.

<u>OPERATIONS RESEARCH</u> (Ops Rsch)

Offered by the Department of Computer Science (DFCS), Department of Economics and Geosciences (DFEG), Department of Management (DFM), and Department of Mathematical

Sciences (DFMS)

Ops Rsch 310. Systems Analysis. 3(1). This course provides an introduction to quantitative modeling methods that have broad application. The course focuses on computer implementation of the models, and the application of these models to practical decision-making scenarios. By demonstrating the application of these techniques to problems in a wide range of disciplines, the course is relevant to technical and non-technical majors at USAFA. The course covers OR tools, such as optimization, queuing, simulation, and decision analysis. Administered by the Department of Management. Instruction provided by inter-departmental Operations Research faculty. Final exam. Prereq: Comp Sci 110, Math 142. Sem hrs: 3 fall or spring.

Ops Rsch 321. Probabilistic Models. 3(1). Selected probabilistic models (such as random walks, Markov Chains, queues, and reliability models) are analyzed as stochastic processes. Administered by the Department of Mathematical Sciences. Final exam. Prereq: Math 356, Math 377, or department approval. Sem hrs: 3 spring.

Ops Rsch 330. Optimization Theory with Microeconomic Applications. 3(1). Calculus-based study of optimization theory for constrained and unconstrained problems focusing on first and second order conditions, comparative statics, envelope theorem, and duality. Optimization tools will be used to develop traditional microeconomic theory: consumer behavior, product and factor pricing, allocation and employment of resources, and the implications of various market structures. The course also includes an introduction to game theory. Cadets cannot receive credit for Ops Rsch 330 in addition to Econ 333 or Mgt 423. Administered by the Department of Economics and Geosciences. Final exam. Prereq: Econ 201, Math 243, and Ops Rsch 310. Sem hrs: 3 spring.

Ops Rsch 405. Operations Research Seminar. 0(1). A course for Operations Research majors that provides for presentation of cadet and faculty research; guest lecturers; field trips; seminars on career and graduate school opportunities for scientific analysts in the Air Force; goal setting exercises; and applications of Operations Research. The class meets once each week. Open only to 1° Operations Research majors. Pass/fail. Prereq: C1C standing. Sem hrs: 0 fall.

Ops Rsch 411. Topics in Mathematical Programming. 3(1). Topics include linear programming (with sensitivity analysis and applications) and non-linear programming. Both the theory and the computer implementation of these techniques are addressed. Administered by the Department of Mathematical Sciences. Final exam. Prereq: Math 344 or Math 360; and either Ops Rsch 310 or department approval. Coreq: Math 243 or Math 253. Sem hrs: 3 fall.

Ops Rsch 417. Quick-Turn Analysis. 3(1). The pace of decisions in modern warfare requires analytic results within very limited time constraints and using only commonly available tool sets. This course focuses on rapid data analysis by writing software to integrate standard office productivity software and geographical information systems to provide visibility and illumination to decision making. Specific skills and abilities taught in this course include data manipulation and analysis, database design and usage, visualization techniques, and high impact – short duration presentation skills. Final Project. Prereq: Comp Sci 210 or Comp Sci 211. Sem hrs: 3 fall.

Ops Rsch 419. Capstone in Operations Research I. 3(2). The study of methodologies associated with business and operations management. A project-based course intended to provide the proper foundation necessary to conduct effective analyses supporting a variety of scenarios. Students will evaluate various project scenarios, develop plans for and conduct analyses, and create effective written and oral presentations. Develop capstone project proposal and milestones supporting Ops Rsch 420. Administered by the Department of Management. Final project. Prereq: Ops Rsch 310; C1C standing in the Ops Rsch, or Sys Engr majors, or course director approval. Sem hrs: 3 fall.

Ops Rsch 420. Capstone in Operations Research II. 3(2). Project development and implementation for real-world clients using advanced operations research techniques with emphasis on problem recognition, model formulation, and Air Force applications. Administered by the Department of Management. Final project. Prereq: Ops Rsch 419, C1C standing in the Ops Rsch, or Sys Engr majors, or course director approval. Sem hrs: 3 spring.

Ops Rsch 495. Special Topics. 1-3(1). Selected advanced topics in Operations Research. Final exam or final report. Offered by DFCS, DFEG, DFM or DFMS. Prereq: Department approval. Sem hrs and offering time determined by department.

Ops Rsch 499. Independent Study. 3(0). Individual study and/or research in Operations Research, under the supervision of a faculty member. Final exam or final report. Offered by DFCS, DFEG, DFM, or DFMS. Prereq: Department approval. Sem hrs: 3 fall or spring.

- Ops Rsch 499A. Independent Study. 2(0). Sem hrs: 2 fall or spring.
- Ops Rsch 499B. Independent Study. 1.5(0). Sem hrs: 1.5 fall or spring.
- Ops Rsch 499C. Independent Study. 1(0). Sem hrs: 1 fall or spring.

PHILOSOPHY (Philos)

Offered by the Department of Philosophy (DFPY)

Philos 310. Ethics. 3(1)*. A critical study of several major moral theories and their application to contemporary moral problems with special emphasis on the moral problems of the profession of arms. Highlighted are the officer's responsibilities to reason and act ethically; develop critical thinking skills; know civic, cultural, and international contexts in which the U.S. military operates; and learn influential normative theories about ethics and the foundations of character. Final exam. Prereq: None. Sem hrs: 3 fall or spring.

In addition, this course/program is a primary contributor to the development and assessment of the following USAFA outcomes:

Responsibilities: *Ethical Reasoning and Action*
Skills: *Critical Thinking*
Knowledge: *Civic, Cultural, and International Environments; Ethics and the Foundation of Character*

Philos 311. War, Morality, and the Military Profession. 3(1). An in-depth examination of the moral issues raised by the profession of arms. Presumes an understanding of moral theory, as a minimum: relativism, egoism, utilitarianism and deontology. May be taken as a sequel to Philos

310, or substitutes for Philos 310 (with department approval) if the student has independently studied ethical theory. Final exam or final project. Prereq: Philos 310. Sem hrs: 3 fall or spring.

Philos 330. Introduction to the Philosophy of Science. 3(1). An analysis of the basic assumptions and principles of the sciences. Types of topics considered include the scientific method, scientific laws, theory construction, scientific explanation, probability, the relationship between the social sciences and the physical sciences, and the relationship between the sciences and the humanities, especially in the formation of values. Final exam or final project. Prereq: Completed or enrolled in Philos 310 or department approval. Sem hrs: 3 spring.

Philos 360. Applied Reasoning. 3(1). An introduction to basic deductive and inductive applied logic. Includes an analysis and evaluation of the notions of evidence and good arguments in fields such as law, medicine, science, engineering, behavioral and social sciences, and military studies. Students will be expected to concentrate on reasoning in a specific field of interest. Final exam or final project. Prereq: C1C, C2C, or C3C standing. Sem hrs: 3 fall.

Philos 370. Introduction to Symbolic Logic. 3(1). An advanced course in logic that examines propositional and predicate languages, model theory, quantifiers, proofs, identity theory and properties of logical systems. Final exam or final project. Prereq: Completed or enrolled in Comp Sci 110. Sem hrs: 3 fall or spring.

Philos 382. American Philosophy. 3(1). An examination of the philosophic background of Puritanism, the Revolutionary period, transcendentalism and pragmatism with special reference to the thought of major American philosophers such as Pierce, James, Royce, Santayana, Dewey. Final exam or final project. Prereq: Completed or enrolled in Philos 310. Sem hrs: 3 fall.

Philos 391. Ancient Western Philosophy. A survey of selected philosophers and schools of thought from the 6th century BCE to the 3rd century CE. Major philosophers of this era include the Pre-Socratics, Plato, Antisthenes, Aristotle, Epicuris, Epictetus, Plotinus, and others. Major schools of thought include the Academics, Cynics, Peripatetics, Epicureans, and Stoics. Final exam or final project. Prereq: Completed or enrolled in Philos 310, or with instructor prior approval. Sem hrs: 3 fall, even-numbered years.

Philos 392. Western Medieval Philosophy. A survey of selected philosophers and schools of thought from the 4th through the 16th centuries. Major philosophers of the era include Augustine, Boethius, Al Farabi, Avicenna, Anselm, Averroës, Maimonides, Aquinas, Duns, Scotus, William of Ockham, and others. The period is characterized by attempts to reconcile classical philosophy with the revealed religions of Judaism, Christianity, and Islam. Final exam or final project. Prereq: Completed or enrolled in Philos 310, or with instructor prior approval. Sem hrs: 3 spring, odd-numbered years.

Philos 393. Modern Western Philosophy. A survey of selected philosophers and schools of thought from the 17th through the 19th centuries. Major philosophers of this era include Descartes, Hobbes, Spinoza, Locke, Leibniz, Hume, Kant, Hegel, Mill, Kierkegaard, Marx, Nietzsche, and others. Major schools of thought include Rationalism, Empiricism, Skepticism,

and German Idealism. Final exam or final project. Prereq: Completed or enrolled in Philos 310, or with instructor prior approval. Sem hrs: 3 fall, odd-numbered years.

Philos 394. Contemporary Topics in Philosophy. An in-depth study of central themes and issues in philosophy examined through through the work of contemporary philosophers (defined as those working from the 20th century through today.) Topics may require a historical survey to provide context for examining contemporary developments. Final exam or final project. Prereq: Completed or enrolled in Philos 310, or with instructor prior approval. Sem hrs: 3 spring, even-numbered years.

Philos 395. Philosophy of Law. 3(1). This course will serve as an introduction to legal philosophy and its relations to moral reasoning. Emphasis on the nature of law, its authority, its relations to morals, the controversies over judicial decision-making, the justification of states interfering with the liberty of its individual citizens, the various different or competing senses of "justice," the question of responsibility and the justification of legal punishment. Final exam or final project. Prereq: Philos 310. Sem hrs: 3 spring.

Philos 401. Comparative Religion. 3(1). A philosophical survey of selected world religions, possibly including "extinct" religions now known only through texts and other artifacts. Faith traditions to be surveyed in every offering of this course include Hinduism, Buddhism, Islam, Judaism, and Christianity. See course syllabus for additional traditions to be examined in a given semester. Final exam or final project. No prereq. Sem hrs: 3 fall.

Philos 402. Philosophy of Religion. 3(1). Topics to be considered include concepts of the divine, grounds for belief in a deity, theories of salvation, the problem of evil, the roles of revelation and reason in religion, problems of religious language, and the role of religion in moral theory. Final exam or final project. No prereq, but students may find Philos 401 a helpful foundation. Sem hrs: 3 spring.

Philos 410. Medical Ethics. 3(1). Ethics applied to biomedical issues using a seminar approach. Ethical problems considered will include informed consent, refusal of treatment, suicide, killing and letting die, paternalism, allocation of health care, patient confidentiality, codes of medical ethics and specific case analyses. Final exam or final project. Prereq: Completed or enrolled in Philos 310. Sem hrs: 3 fall.

Philos 495. Seminar in Philosophy. 3(1). Selected topics in philosophy. Final exam or final project. Prereq: C1C or C2C standing. Sem hrs: 3 fall or spring.

Philos 499. Independent Study. 3(0). Philosophical research guided by an instructor. Topics and meetings arranged with the instructor. No final. Prereq: Department approval. Sem hrs: 3 fall or spring.

- Philos 499A. Independent Study. 2(0). Sem hrs: 2 fall or spring.
- Philos 499B. Independent Study. 1.5(0). Sem hrs: 1.5 fall or spring.
- Philos 499C. Independent Study. 1(0). Sem hrs: 1 fall or spring.

PHYSICAL EDUCATION (Phy Ed)

Offered by the Department of Physical Education under the Director of Athletics (AD).

Ext Prog 9xx. Intramural Practice Time. These excusal codes help schedulers block out the time in cadets' schedules for participation in the appropriate athletic activities. For more information see COURSES WITH UNUSUAL SCHEDULES section.

Ext Prog 917. Intramural Practice Time. Athletes are enrolled in this course to block out time for intramural practice during M7.

Ext Prog 927. Intramural Practice Time. Athletes are enrolled in this course to block out time for intramural practice during T7.

Phy Ed 100. Basic Physical Training. 0(0). Preparation for strenuous physical education and athletics by development of physical strength, endurance, agility, and coordination through conditioning exercises, sports competition, and taking the Physical Fitness and Aerobics Test. Special training in conditioning as needed. Pass/fail. Sem hrs: 0 summer.

Phy Ed 110. Boxing (Males Only). Boxing is taught to fourth class male cadets in order to develop an understanding of the physiological and psychological aspects of boxing. In addition to physical conditioning, boxing will also develop and intensify the military leadership attributes of quick reaction, coordination, accurate timing, cool judgment, aggressiveness, and determination. Boxing quickly acclimates the mind and body to adapt and overcome stress and fear which is a trait that is absolutely essential to fighting men. It teaches the ability to keep calm and poised under pressure, thus developing emotional control. This calmness under pressure can mean the difference between a right or wrong decision. The course includes 8 lessons of skills to develop self confidence, with safety, rules, and scoring emphasized prior to the graded review lessons. Sem hrs: 0.5(2xx) fall or spring.

In addition, this course/program is a primary contributor to the development and assessment of the following USAFA outcomes:

Skills: Decision Making, Stamina, Courage, Discipline

Phy Ed 111. Swimming. Swimming is an individual sport that will teach cadets how to swim a variety of strokes and skills and to aid each cadet in learning to handle themselves in a swimming emergency. The class will provide sufficient aerobic and anaerobic activity and stroke skills so each individual is able to maintain and improve physical fitness in an aquatic environment as a cadet and officer. The students are graded on stroke skills, a timed 250 yard or meter swim, underwater swim, 5-meter scenario, treading water and drown proofing. Sem hrs: 0.5(2xx) fall or spring.

In addition, this course/program is a primary contributor to the development and assessment of the following USAFA outcomes:

Skills: Stamina, Courage, Discipline

Phy Ed 112. Physical Development. The primary purpose of this course is to teach the cadet the basic information necessary to design effective training programs so that he or she can maintain a good level of fitness while a cadet, later as an officer, and throughout the lifespan. This class is also meant to provide the cadet the information necessary to perform at an acceptable level on

the AFT and the PFT. Students are graded on a written exam (40 points), technique demonstrated on 8 exercises (40 points), an exercise log book (10 points), and 10 instructor points. Sem hrs: 0.5(2xx) fall or spring.

Phy Ed 114. Introduction to Combatives (Females Only). Introduction to Combatives is taught to all female fourth class cadets at the United States Air Force Academy in order to develop an understanding of the physiological and psychological aspects of combat. In addition to the physical aspects of self defense, female cadets are taught how to be aware of their environmental surroundings, avoid dangerous situations, and to be assertive if necessary in dealing with unwanted confrontation. The value of self defense and combative skills is not only in the physical skills that are acquired, but the acclimation of the body and mind in adapting and overcoming a fearful and stressful situation. This course teaches the cadet to think and react under pressure and develops self confidence, courage, stamina and agility, all necessary characteristics of a strong military presence. Cadets are tested in a competitive environment and are expected to be able to convey key points of techniques taught. Final Exam. Sem hrs: 0.5(2xx) fall or spring.

In addition, this course/program is a primary contributor to the development and assessment of the following USAFA outcomes:

Skills: Decision Making, Courage, Discipline

Phy Ed 119. Basic Swimming I. This course is designed for cadets with little exposure to aquatics or those needing work on specific swimming endurance. Because these cadets typically need more time to acclimate to swimming, the course is 16 lessons. Entry into the class is determined by a student's aquatic ability assessment, a 250 yard timed swim and input from aquatics instructors. The first eight lessons focus on technique. The final eight lessons focus on building swimming endurance with continued work on technique. Cadets will be introduced to survival skills in preparation for the 200 level aquatics course. Cadets are encouraged to move on to regular water survival. However, more typically, they move on to Basic Water Survival for their 200 level aquatics. Replaces Phy Ed 111. Sem hrs: 0.5(2xx) fall or spring.

In addition, this course/program is a primary contributor to the development and assessment of the following USAFA outcomes:

Skills: Stamina, Courage, Discipline

Phy Ed 152. Intercollegiate Sports. .05(2xx) fall or spring.

Phy Ed 211. Basic Water Survival. This course continues the development of the basic swimmer and teaches cadets basic aquatic survival skills that last a lifetime. These survival methods serve officers well throughout their careers. The class provides sufficient aerobic and anaerobic activities that challenge the cadets to maintain an above average level of fitness while having fun through aquatics. Cadets learn to save their own lives and assist others in a water emergency, survive in the water for long periods of time, and build confidence to swim long distances. Moreover, cadets experience situations that develop self-confidence, emotional control, persistence and courage. A variety of skills challenge cadets to move beyond their current skill and comfort levels. Cadets are evaluated in each one of the skills taught throughout the course. Replaces Phy Ed 222. Final exam. Sem hrs: 0.5(2xx) fall or spring.

In addition, this course/program is a primary contributor to the development and assessment of the following USAFA outcomes:

Skills: Stamina, Courage, Discipline

Phy Ed 215. Combatives I. Introduction to students in unarmed fighting. Students are taught a series of techniques in order to respond to a violent confrontation. Students are taught to defend themselves from a standing position incorporating strikes, dominant body position, and basic weapons retention. Students are put in scenario-based drill in order to apply techniques in a competitive environment. Students are tested on their ability to convey key components of what they are taught. Final exam. Sem hrs: 0.5(2xx) fall or spring.

In addition, this course/program is a primary contributor to the development and assessment of the following USAFA outcomes:

Skills: Decision Making, Courage, Discipline

Phy Ed 219. Basic Swimming II. Replaces Phy Ed 222. Sem hrs: 0.5(2xx) fall or spring.

Phy Ed 222. Water Survival. An introduction to basic personal water survival skills and lifesaving techniques. The primary objective of the course is to learn personal water survival skills that are needed in a water emergency. A secondary objective is to learn basic lifesaving skills needed to assist someone else involved in a water emergency. Work to increase cardiovascular and muscular endurance is also part of the course. Prereq: Phy Ed 111 or 119. Final exam. Sem hrs: 0.5(2xx) fall or spring.

In addition, this course/program is a primary contributor to the development and assessment of the following USAFA outcomes:

Skills: Stamina, Courage, Discipline

Phy Ed 252. Intercollegiate Sports. Sem hrs: 0.5(2xx) fall or spring.

Phy Ed 315. Combatives II. An introduction to basic unarmed offensive and defensive, grappling, choking, and joint locking skills. Includes live contact combative grappling designed to instill confidence, the ability to think and react quickly under pressure, and the ability to defend oneself in a hand-to-hand combat situation. Students will be expected to demonstrate the aggressive mind set, mental toughness and warrior spirit required to survive and prevail in an unarmed combat situation. Final exam. Prereq: Phy Ed 215. Sem hrs: 0.5(2xx) fall or spring.

In addition, this course/program is a primary contributor to the development and assessment of the following USAFA outcomes:

Skills: Decision Making, Stamina, Courage, Discipline

Phy Ed 340. Racquetball. This class is designed to introduce the cadets to the essential fundamentals of racquetball including the introductory skills and rules of the game. This class offers the opportunity for students to develop a lifetime sport that can be used to stay physically fit and provides a recreational sport to play during intramural competition and throughout their Air Force career. This is a fun and exciting class for the cadets through athletics. Sem hrs: 0.5(2xx) fall or spring.

Phy Ed 341. Tennis. Tennis is an individual sport that teaches cadets the fundamentals of tennis so that they will achieve sufficient skills to participate in a game while a cadet, later as an officer, and throughout their life. Cadets will learn and be tested on the forehand, backhand, and the serve. Their physical fitness will be maintained and improved through drills and match play. Single and doubles match play will also be evaluated and graded. Each cadet will learn enough about the game so that he or she will have a newfound appreciation for the sport and be able to appreciate the game. Sem hrs: 0.5(2xx) fall or spring.

Phy Ed 342. Golf. An introduction to the sport of golf designed to give students confidence by teaching the fundamental golf mechanics through repetitive drill techniques. Emphasis is placed on skills improvement and understanding a respect for the game of golf, its traditions, rules, and etiquette. Basic golf swing technique demonstration and practice of putting, short irons, long irons, proper setup, and grip make up the foundation of the course. Emphasizes the need for practice discipline and mental concentration. One written exam, one performance exam. Sem hrs: 0.5(2xx) fall or spring.

Phy Ed 343. Open Rock Climbing. This course is designed to introduce cadets to the fundamentals of rock climbing. This class develops muscle strength, flexibility, agility, balance, coordination, problem solving, fear management, and physical and mental focus. Learning to rock climb in an indoor facility allows climbers to challenge themselves and overcome fear in a rational manner in a fun and safe environment. The cadets are taught and tested on fundamental climbing skills such as use and care of climbing equipment, hand and footwork efficiency, knots, top roping, bouldering, belaying, rated climbs, judgment, and safety. Cadets will be provided all equipment and gear necessary to complete this course. Situational awareness, risk management and proper decision making are mandatory components of this course. This course will be offered senior year or as available in elective choices. Cadets may take either SCUBA or Rock Climbing, not both. Prereq: Phy Ed 112 and physical standards as established by the course director. One written exam, one performance exam. Sem hrs: 0.5(2xx) fall or spring.

Phy Ed 352. Intercollegiate Sports. Sem hrs: 0.5(2xx) fall or spring.

Phy Ed Aca 440. Exercise Physiology. 3(2). Exercise physiology is the study of body functions before, during, and after an exercise session. This class also looks at the short-term and long-term changes that result from exercise training. Includes both academic classes and laboratory experiences where the students learn about their body composition, strength, anaerobic power, and aerobic capacity. Prereq: Course Director approval. Sem hrs: 3 fall.

Phy Ed 452. Intercollegiate Sports. Sem hrs: 0.5(2xx) fall or spring.

Phy Ed Aca 460. Introduction to Sport Administration. 3(1). An integrated course – applying organizational management, sports law, facilities, leadership, ethics and philosophy, sociology in sport, finance and marketing as it applies to professional, intercollegiate, interscholastic, and youth/community sport. Independent research. Final paper. Prereq: C1C standing with Course Director approval. Sem hrs: 3 fall or spring.

Phy Ed 477. Independent Exercise. Sem hrs: 0.5(2xx) fall or spring.

Phy Ed 479. Cadet Instructor. Sem hrs: 0.5(2xx) fall or spring.

Phy Ed 483. Scuba: SCUBA offers unique activities cadets have rarely experienced prior to attending the Academy. As individuals and "buddy teams", cadets will be exposed to both physical and mental challenges while being sustained underwater by a life support system. The skills mastered in this course will remove any pre-conceived fears of the water. This course will instill a more sound confidence level in future warrior officers and leaders. Upon completion, cadets can pursue their SCUBA activities as a Certified Open water SCUBA diver. SCUBA is a lifelong activity that can be utilized wherever there is a body of water. Prereq: Phy Ed 111 or 119 and Phy Ed 211 or 222. Sem hrs: 0.5(2xx) fall or spring.

Phy Ed 484. Volleyball. Volleyball is a lifetime team sport that teaches cadets the fundamentals of volleyball so that they will achieve sufficient skills to participate in a game while a cadet, later as an officer, and throughout their life. The class provides a history of volleyball, instruction on rules and theory, as well as basic, intermediate, and advanced technical skill development. Each cadet will learn enough about the game so that he or she can appreciate volleyball at the college and professional level. The students are graded on a skills test to include underhand and overhand passing, serving, setting and attacking, as well as a play evaluation in scrimmages grading the cadet's ability, attitude, and effort. Final exam. Sem hrs: 0.5 (2xx) fall or spring.

Phy Ed 486. Basketball. An introduction to the sport of basketball designed to broaden each player's understanding, knowledge, and appreciation for the game. Includes instruction in fundamental skills and basic drills each player can use for further skill development. Areas covered include passing, ball handling, shooting, individual offense, individual defense, rebounding, screens, team offense, team defense, and transition. The course provides maximum time for players to compete on the court. Emphasizes skill development and teamwork. Play evaluation. Sem hrs: 0.5(2xx) fall or spring.

Phy Ed 487. Soccer. Soccer is a lifetime team sport that teaches cadets the fundamentals of soccer so that they will achieve sufficient skills to participate in a game while a cadet, later as an officer, and throughout their life. The class provides sufficient aerobic and anaerobic activity so that each cadet's physical fitness will be maintained or improved, while having fun through athletics. Each cadet will learn enough about the game so that he or she can appreciate soccer at the college and professional level. The students are graded on rules of the game (written 20 question test), a skills test to include juggling, dribbling, passing, and shooting, and play evaluation in scrimmages grading the cadet's ability, attitude, and effort. Final exam. Sem hrs: 0.5 (2xx) fall or spring.

Phy Ed 488. Softball. Softball is a team sport that teaches cadets the fundamental skills required to play the game while a cadet, later as an officer, and throughout their life. Cadets will learn both the fundamental skills it takes to be successful in the sport, and the rules by which the game is governed. Students will learn the mechanics for throwing, hitting, fielding, and base-running, and will be evaluated on their progression throughout the class. Teaches the relationship between individual performance and overall team success through teambuilding and leadership opportunities. Sem hrs: 0.5 (2xx) fall or spring.

Phy Ed 499. Independent Exercise Study. Independent study focused on physical exercise. Sem hrs: 0.5(0) fall or spring.

Phy Ed Aca 499. Independent Study. 3(0). Individual research and study in the physical education field under the direction of a faculty member. Emphasizes the use of laboratory facilities. No final. Research report. Prereq: Course Director approval and Department Head approval. Sem hrs: 3 fall or spring.

- Phy Ed Aca 499A. Independent Study. 2(0). Sem hrs: 2 fall or spring.
- Phy Ed Aca 499B. Independent Study. 1.5(0). Sem hrs: 1.5 fall or spring.
- Phy Ed Aca 499C. Independent Study. 1(0). Sem hrs: 1 fall or spring.

Phy Ed 8xx. Intercollegiate Practice Time. These excusal codes help schedulers block out the time in cadets' schedules for participation in the appropriate athletic activities. For more information see COURSES WITH UNUSUAL SCHEDULES section.
Phy Ed 9xx. Intercollegiate Practice Time. These excusal codes help schedulers block out the time in cadets' schedules for participation in the appropriate athletic activities. For more information see COURSES WITH UNUSUAL SCHEDULES section.

Phy Ed 815. Intercollegiate Practice Time. Athletes are enrolled in this course to block out time for intercollegiate practice on M afternoons.

Phy Ed 825. Intercollegiate Practice Time. Athletes are enrolled in this course to block out time for intercollegiate practice on T afternoons.

Phy Ed 915. Intercollegiate Practice Time. Athletes are enrolled in this course to block out time for intercollegiate practice on M afternoons.

Phy Ed 925. Intercollegiate Practice Time. Athletes are enrolled in this course to block out time for intercollegiate practice on T afternoons.

PHYSICS (Physics)
Offered by the Department of Physics (DFP)

Physics 110. General Physics I. 3(2)*. Introductory calculus-based physics course with emphasis on contemporary applications (first semester). Topics include Newtonian mechanics (statics and dynamics), conservation of energy, momentum, rotational motion, Universal Law of Gravitation and motion in gravitational fields, Kepler's Laws, and waves. Possible additional topics include angular momentum; oscillations, special relativity, fluids, and thermodynamics. Course emphasizes the use of vectors and calculus in problem solving. Course includes in-class laboratories and computer applications to highlight key concepts. Final exam. Coreq: Math 142. Sem hrs: 3 fall or spring.

In addition, this course/program is a primary contributor to the development and assessment of the following USAFA outcomes:

Skills: Quantitative Literacy, Critical Thinking
Knowledge: Principles of Science and the Scientific Method

Physics 215. General Physics II. 3(2)*. Introductory calculus-based physics course with emphasis on contemporary applications (second semester). Topics include electrostatics, simple DC circuits, magnetic fields, electromagnetic induction, electromagnetic waves, and physical optics. Possible additional topics include simple AC circuits and applications, geometric optics, and selected topics in modern physics. Course emphasizes the use of vectors and calculus in problem solving. Course includes in-class laboratories and computer applications to highlight key concepts. Highly desirable for course to be taken in the semester immediately following the successful completion of Physics 110. Final exam. Prereq: Physics 110 and Math 142. Sem hrs: 3 fall or spring.

In addition, this course/program is a primary contributor to the development and assessment of the following USAFA outcomes:

Skills: Quantitative Literacy, Critical Thinking

Knowledge: Principles of Science and the Scientific Method

Physics 264. Modern Physics. 3(1). Introduction to the special theory of relativity and a historically-based development of quantum theory. Investigation of Bohr model of the atom. Introduction to quantum mechanics and its application to problems involving simple forms of potential energy. Possible application topics include atomic and molecular physics, solid-state physics, nuclear reactions and decay, and elementary particles. Final exam. Prereq: Physics 215 or department approval. Coreq: Math 243 (or Math 253). Sem hrs: 3 spring.

Physics 310. Principles of Nuclear Engineering. 3(1). A survey course in the aerospace uses of nuclear energy. This course introduces the student to the sources and uses of nuclear energy from radioactive decay, fission, and fusion. It covers such topics as nuclear space propulsion and power; ground-based nuclear power; the production, effects, and detection of nuclear weapons; the protection of man and aerospace assets from nuclear radiation; and the safe disposal of radioactive waste. Final exam. Prereq: Physics 215 or department approval. Sem hrs: 3 spring.

Physics 315: Combat Aviation Physics. 3(1). A broad-based study of the principles of physics as they directly apply to the realm of combat aviation. The course covers three topical areas: the physics of flight as a dynamic investigation of forces and energy applied to the combat maneuvering required to win air-to-air engagements; the combat use of the electromagnetic spectrum, primarily as it applies to radar, IR seekers, and countermeasures; and the physics behind the employment of air-to-ground weapons. Final exam and/or final paper. Prereq: Physics 215 or department approval. Sem hrs: 3 spring.

Physics 341. Laboratory Techniques. 3(2). An introductory laboratory course developing skills in experimental techniques and data analysis. Course includes instruction in the use of various types of electronic instrumentation and devices to analyze and design electrical circuits. Experiments will investigate the laws and principles of modern physics taught in Physics 264. Coreq: Physics 264 or department approval. Sem hrs: 3 fall or spring.

Physics 355. Classical Mechanics. 3(1). An examination of the underlying classical laws governing the general motion of bodies. Topics covered include vector calculus, Newtonian dynamics, Lagrangian and Hamiltonian dynamics, the law of gravity and central-force motion,

two-particle collisions, and scattering. Possible topics include linear and coupled oscillations, noninertial reference frames, chaos, transformation properties of orthogonal coordinate systems and rigid-body motion. Extensive application of calculus, ordinary differential equations, and linear algebra will be made in the solution of problems. Final exam. Prereq: Physics 215; completed or enrolled in Math 346 or department approval. Sem hrs: 3 fall.

Physics 356. Computational Physics. 3(1). An introduction to solving complex physical problems using numerical techniques. Subjects covered may include: kinematics, damped/driven oscillators, nonlinear dynamics, chaos, coupled oscillators, waves, thermal diffusion, and electromagnetic potentials. Methods presented include regression analysis, numerical differentiation, and solutions to ordinary and partial differential equations. Final exam or final project. Prereq: Physics 355. Sem hrs: 3 spring.

Physics 361. Electromagnetic Theory I. 3(1). Develops Maxwell's equations and basic principles of electromagnetism. Includes electrostatic fields in both vacuum and in dielectrics, the Laplace and Poisson equations, magnetic fields associated with constant and time varying currents, and magnetic materials. Final exam. Prereq: Physics 215. Coreq: Math 346 or department approval. Sem hrs: 3 fall.

Physics 362. Electromagnetic Theory II. 3(1). Applications of Maxwell's Equations: plane waves, reflection, refraction, guided waves, electric and magnetic dipoles and quadruples, and antennas. The interaction between plane waves and plasmas is treated. Basics of relativistic electrodynamics are introduced. Final exam. Prereq: Physics 361. Sem hrs: 3 spring.

Physics 370. Upper Atmospheric and Geo-Space Physics. 3(1). A survey course on the composition and physics of the upper atmosphere and the near-earth environment. Topics include solar-terrestrial interactions; observations, phenomena and military operations in the near-earth environment; structure, dynamics and transport in the upper atmosphere; and energy transfer, remote-sensing, and military operations in the upper atmosphere. Final exam. Prereq: Physics 215 or department approval. Sem hrs: 3 fall.

Physics 371. Astronomy. 3(1). A calculus-based study of the fundamental concepts of astronomy. Emphasis is placed on understanding the basic physical concepts that explain stellar structure, stellar evolution, galactic structure, the solar system and the origin of the universe. Includes up to three night classes at the Academy Observatory. Final exam. Prereq: Physics 215 or department approval. Sem hrs: 3 fall.

Physics 375. Physics of Space Situational Awareness. 3(1). A survey course in the application of physics principles and their constraints to space situational awareness (SSA). SSA of space objects can be thought of in terms of where it is and how did it get there, what it is and has it changed, and do we need to worry about it? The answers to these questions are crucial in deriving actionable knowledge for national defense. Topics include space surveillance using radar and electro-optical sensors; orbit determination and prediction; high-resolution imagery; non-resolvable space object identification; and military operations in space and mission impacts. Final exam or final project. Prereq: Physics 215 or department approval. Sem hrs: 3 spring.

Physics 391. Introduction to Optics and Lasers. 3(1). A survey course in optics. Including: geometrical optics (lenses, mirrors, ray tracing, and optical instruments); physical optics (interference, diffraction, polarization, spectra, and scattering); introduction to lasers (laser operation, pumping, resonators, and optical cavities); and contemporary topics (Fourier optics, imaging, and holography). Final exam. Prereq: Physics 215. Coreq: Math 245 or department approval. Sem hrs: 3 fall.

Physics 393. Solid State Physics. 3(1). Introduction to the physics of the solid state nature of matter. Crystal structure, crystal binding, lattice vibration, free electron theory and band theory. Basic introduction to quantum theory and quantum statistics of solids. Theories are used to explain metals, semi-conductors and insulators. Survey topics include magnetism, superconductivity, optical phenomena in solids, crystal imperfections and the physics of solid state devices. Final exam. Prereq: Physics 215. Coreq: Math 245 or department approval. Sem hrs: 3 fall.

Physics 405. Physics Seminar. 0(1). A professional development course emphasizing skills useful for physics research. This course gives cadets enrolled in Physics 490 an opportunity to present results of their research, receive training in specific research skills, and have discussions with experienced faculty researchers regarding such topics as professional ethics and contemporary issues. Pass/fail. Prereq: C1C standing, Physics major or department approval. Coreq: Physics 490. Sem hrs: 0 fall or spring.

Physics 421. Thermal and Statistical Physics. 3(1). Classical thermodynamics with an emphasis on thermodynamic laws and applications to cycles. Kinetic theory, statistical thermodynamics, and quantum statistics. Applications of statistics to quantum systems. Final exam. Prereq: Math 300, Math 356, or Math 378. Coreq: Physics 465, Chem 336, or department approval. Sem hrs: 3 fall.

Physics 451. Plasma Physics. 3(1). A comprehensive introduction to the plasma state of matter. Topics include single particle motion, adiabatic invariants, fluid description of a plasma, waves in plasmas, kinetic theory, diffusion and resistivity, and stability. Emphasis will be placed on applying plasma physics principles to solar-planetary interactions and space vehicle operations. Final exam. Prereq: Physics 370 or department approval; completed or enrolled in Physics 362 and Math 346. Sem hrs: 3 spring.

Physics 465. Quantum Mechanics. 3(1). Basic principles of quantum mechanics. Postulates. Dirac notation. Schrodinger's equation. Operators, eigenfunctions and eigenvalues. Potential barriers and wells. Simple harmonic oscillator. Orbital and spin angular momentum. Addition of total angular momentum. Hydrogen atom. Elementary radiation theory. Time-independent perturbation theory. Two-level systems. Stark effect. Fine structure. Final exam. Prereq: Physics 264 and Math 346, or department approval. Sem hrs: 3 fall.

Physics 468. Atomic and Nuclear Physics 3(1). Treatment of the fundamental physical concepts governing all of microscopic physics which includes elementary particle, nuclear, atomic and molecular physics. The topics covered include the standard model of elementary particles and interactions symmetries and conservation laws, gauge theories, properties of the

nucleus, nuclear models, nuclear interactions and decays, scattering theory, atomic systems, atomic and molecular spectroscopy techniques. Final exam. Prereq: Physics 465 or department approval. Sem hrs: 3 spring.

Physics 482. Laser Physics and Modern Optics. 3(1). A detailed study of the operation of the laser: types of lasers, lasing media, pumping mechanisms, resonators and cavities, laser modes and Gaussian properties. Covers modern optics: introductory electro-optics, nonlinear optics, statistical optics and quantum mechanical analogs of optical systems. Final exam. Prereq: Physics 362, ECE 444, or department approval. Sem hrs: 3 spring.

Physics 486. Astrophysics. 3(1). Application of physics to astrophysical problems and topics of current interest in astrophysics. Typical topics include stellar structure and evolution, supernovae, white dwarfs, neutron stars, black holes, galactic structure, active galaxies, quasars, cosmology and general relativity. Specific topics depend on instructor and student preferences. Final exam. Prereq: Physics 264 and Physics 362, or department approval. Sem hrs: 3 spring.

Physics 490. Capstone Physics Research. 3(2). A research experience course in which cadets work in small teams to conduct original research in one area of physics, which may include lasers/optics, space physics, astronomy, physics education, or other physics subdiscipline. During the semester, each team will work on a single project and experience the full range of the research process, including planning and implementing a research project, analyzing data, and reporting results in technical written reports and oral presentations. Some cadets will publish their work in professional journals. Prereq: C1C standing and department approval. Coreq: Physics 405. Sem hrs: 3 fall or spring.

Physics 495. Special Topics. 3(1). Selected topics in physics. Final exam or final report. Prereq: Department approval. Sem hrs: 3. Offering time determined by department.

Physics 499. Independent Study. 3(0). Individual research under the direction of a faculty member. Final report. Prereq: Department approval. Sem hrs: 3 fall or spring.

- Physics 499A. Independent Study. 2(0). Sem hrs: 2 fall or spring.
- Physics 499B. Independent Study. 1.5(0). Sem hrs: 1.5 fall or spring.
- Physics 499C. Independent Study. 1(0). Sem hrs: 1 fall or spring.

POLITICAL SCIENCE (Pol Sci)

Offered by the Department of Political Science (DFPS)

Pol Sci 211. Politics, American Government and National Security. 3(1). This course introduces students to the study of politics and government and examines the basic ideological, structural, and procedural choices faced by any political system. Special emphasis is given to an understanding of the foundations and traditions of American democracy and the structure, decision processes and policy outcomes, especially defense policy outputs, of the American political system. Students will examine current policy issues that affect the military. Final exam. Sem hrs: 3 fall or spring.

In addition, this course/program is a primary contributor to the development and assessment of the following USAFA outcomes:

Responsibilities: *Respect for Human Dignity*
Skills: *Decision Making*
Knowledge: *National Security & Full Spectrum of Joint and Coalition Warfare*

Pol Sci 300. Introduction to Political Science: Overview and Methods. 3(1). Provides an introduction to the discipline. The course introduces students to the methods used in political science, placing emphasis on the process of research design—from coming up with a hypothesis, to determining how to test that hypothesis, to how to present the conclusions of the research. The research approaches presented in this class are essential to the political science major, and of great benefit to cadets in other majors that require the systematic examination of research questions. Final exam or research paper. Prereq: None. Sem hrs: 3 fall.

Pol Sci 301. Political Theory. 3(1). Provides an overview of political thought from the ancient Greeks to the present. Philosophers studied include Plato, Aristotle, Augustine, Aquinas, Machiavelli, Hobbes, Locke, Montesquieu, Rousseau, Marx, and Nietzsche. The course's examination of the debates about human nature, the best regime, justice, equality, freedom, community, natural rights, and between religion and comparative and national security politics provide an essential foundation for the political science major and are invaluable for any airman-scholar. Final exam or research paper. Prereq: None. Sem hrs: 3 fall.

Pol Sci 302. American Foreign and National Security Policy. 3(1). Explores the evolution of American foreign and national security policy within a rapidly changing global environment; sets American national security policy in a broader context of American foreign policy interests and instruments of state power. Prepares for advanced electives in international relations through an examination of how the U.S. pursues its objectives when the structure of the international environment and the nature of state power are in flux. Prepares for advanced electives in comparative politics by examining how the U.S. attempts to shape the political and economic institutions of other states using a broad array of foreign policy tools. Prepares for advanced electives in American politics by examining the domestic political, institutional, and constitutional sources of U.S. foreign and national security policy. Complements professionally oriented courses on contemporary global and security issues by providing the context for how the U.S. defines and pursues grand strategy in the modern world. Final exam or research paper. Prereq: Pol Sci 211. Sem hrs: 3 spring.

Pol Sci 390. International Relations Theory. 3(1). Introduces the basic concepts of international relations. Major theoretical approaches to the analysis of international politics (realism, liberalism, and globalism) will be used to explore the nature of the international system and various aspects of state behavior in their historical and contemporary settings. Among the subjects examined within this framework: the formulation of foreign policy, mechanisms of conflict and cooperation, the origins of war, issues of international interdependence, international political economy and questions of international ethics. Final exam or research paper. Prereq: Soc Sci 212 or Soc Sci 412. None. Sem hrs: 3 spring.

Pol Sci 392. American Political System and Theory. 3(1). Explores the origin and development of American political ideas and institutions. This course examines the notion of American exceptionalism and the design and operation of the American system. Topics include: American

constitutional design and its consequences; the expression of preferences; the analysis of institutional behavior; and the policy process. Final exam or research paper. Prereq: Soc Sci 212 or Soc Sci 412. None. Sem hrs: 3 spring.

Pol Sci 394. Comparative Government and Politics. 3(1). Introduces major theoretical approaches to the comparative study of politics. Applies these approaches to topics like government institutions, political participation and social change as they relate to various state and nonstate actors. Final exam or research paper. Prereq: None. Sem hrs: 3 spring.

Pol Sci 421. International Security: Political Violence and Terrorism. 3(1). Applies theories of international security to the roots and forms of political violence in a globalized era. Examines the sub-national and transnational sources of conflict as well as the impact of globalization on the character of collective violence. Investigates the emergence, motivations and strategies of violent non-state actors with emphasis on ethno-political groups, militant religious movements, transnational criminal organizations, warlords and insurgencies. Focuses on the use of terrorism to achieve political objectives. Final exam or research paper. Prereq: None. Sem hrs: 3 spring.

Pol Sci 423. War Crimes, Genocide, and Human Rights. 3(1). This course explores historical, legal, and political perspectives on the law of armed conflict and the development of human rights law. The Nuremberg Tribunals, the Holocaust, the Cambodian and Rwandan genocides, the My Lai incident, and experiences of prisoners of war are used as case studies within this framework. Resistance movements are also examined. The course is team taught by members of the Political Science, Law, and History departments, and can be used as a social science elective or an elective in any of these three departments. Final exam or final research paper. Prereq: Department approval. Sem hrs: 3 fall.

Pol Sci 444. International Political Economy. 3(1). This course will explore the theory and practice of how economic motives affect political decisions and how most political decisions have economic repercussions, both domestically and internationally. Specific topics will include the development of the international monetary system, international trade policy, the effects of multinational corporations, foreign direct investment, development of the Global South, and contemporary issues such as the recent Asian financial crisis. Final exam or research paper. Prereq: None. Sem hrs: 3 spring.

Pol Sci 445. Global Governance and International Institutions. 3(1). Examines the role and relationship of international institutions, to include transnational organizations, regimes, and networks, by which states and non-state actors address a broad spectrum of challenges for global governance. Pertinent global issues related to security, trade, and international justice include conflict resolution; peacekeeping and peacemaking; nuclear non-proliferation; international finance; world trade; development aid; refugee problems; climate change; and human rights. Final exam or final paper. Prereq: None. Sem hrs: 3 fall.

Pol Sci 451. American Political Thought. 3(1). A survey of basic themes in American political thought beginning with the 17th century European origins of American political thought and extending to modern attempts to strike a balance between individual rights and social needs. The focus is on the difficulties of translating principles into practice. Final exam or research paper.

Prereq: None. Sem hrs: 3 fall of odd-numbered years.

Pol Sci 460. Comparative Security Policy and Civil-Military Relations. 3(1). Studies the security policies and policy-making processes of various world regions as well as the national and regional implications of both traditional and non-traditional security issues. Examines relationship between civilian authorities and the military establishment and the implications for governance. Specific cases help develop individual skills in analyzing national security priorities in the post-Cold War world. Final exam or research paper. Prereq: None. Sem hrs: 3 spring.

Pol Sci 462. Politics and Intelligence. 3(1). Explores the character of secrecy in the American democratic system. This course investigates the role of intelligence in the development and implementation of US national security policy. Focuses on the key players in the intelligence community, the capabilities of intelligence systems, the tradecraft of spying, and the core intelligence functions of collection, analysis, covert action and counterintelligence. Includes examination of the roles and contributions of military intelligence and current issue in the intelligence field. Final exam or research paper. Prereq: None. Sem hrs: 3 fall

Pol Sci 463. Comparative Political Theory. 3(1). This course compares selected texts in Western and Eastern political thought with a focus on the ultimate foundation(s) for basic political principles such as justice and order. A special focus will be the relationship between reason, religious faith, and custom as sources of authority in political thinking and action. Major Eastern traditions and texts will include Islam, Hinduism, and Confucianism. Western texts on religion, philosophy, and sources of political authority will be interspersed with readings from classic Eastern texts, 20th century political works by Eastern thinkers, and contemporary scholarship. Possible texts include, from Islam, Al Farabi, Ibn Rushd, Ibn Sinna, Qutb, and Khomeini; from Hinduism, the Vedas and Gandhi; from the Chinese tradition, Confucius and neo-Confucian scholarship; from the Western tradition, Plato, Aquinas, and Locke. This is a seminar course, emphasizing discussion and written essays. Final paper. Prereq: Philos 310 or Pol Sci 301. Sem hrs: 3 spring of odd-numbered years.

Pol Sci 464. Democratization: The Theory and Practice of State Building. 3(1). The movement worldwide from authoritarianism to democracy has been the major political event of our generation. This trend to democratic governance is coupled with the US military's increasing role in establishing and fostering not only the institutions of state, but the environment that ensures liberal governance. This course will explore democratization, the means and methods that the 70+ countries since the mid-1970s have employed in their movement toward a democratic regime. Final paper. Prereq: None. Sem hrs: 3 spring.

Pol Sci 465. US National Space Policy. 3(1). Examines the evolution, major influences on, and consequences of US national space policy. Focuses on the relationships among politics, policy-making processes, law, and technology as related to civil, military, commercial, and intelligence space sectors. Addresses rights and responsibilities of states in the use of outer space. Topics include NASA space strategies; military space missions; commercial space trends; intelligence function; international agreements; sovereignty over air, space, and celestial bodies; and government liability. Final exam, final paper, or final project. Prereq: None. Sem hrs: 3 fall.

Pol Sci 469. Politics of Russia, Eastern Europe, and Eurasia. 3(1). Examines historic, cultural, economic, social, and geographic traits that distinguish Russia and its neighbors and shape their domestic political processes and interstate relations. Critically compares the politics, governments, and orientations of post-Soviet states. Surveys contemporary regional issues such as ethnic conflict, nationalism, and political-economic reforms, with a particular emphasis on security concerns. Final exam or research paper. Prereq: None. Sem hrs: 3 fall.

Pol Sci 471. Politics of Europe. 3(1). Examines historic, cultural, economic, social and geographic traits that distinguish this region and shape its domestic political processes and interstate relations. Critically compares the politics, governments and orientations of European states and important regional powers. Surveys contemporary issues such as democratization, arms control and regional integration, with a particular emphasis on security concerns. Final exam or research paper. Prereq: None. Sem hrs: 3 fall.

Pol Sci 473. Politics of Asia. 3(1). Examines historic, cultural, economic, social and geographic traits that distinguish this region and shape its domestic political processes and interstate relations. Surveys the governments of selected countries. Examines in particular the influence of Japan and China on regional and global affairs. Includes a survey of contemporary multilateral issues salient in the region, with particular focus on regional security concerns. Final exam or research paper. Prereq: None. Sem hrs: 3 fall.

Pol Sci 475. Politics of Latin America. 3(1). Examines historic, cultural, economic, social, and geographic traits that distinguish this region and shape its domestic political processes and interstate relations. Selected Latin American political systems are explored in detail. Issues such as political stability, civil-military relations and democratization are treated as well, along with politico-economic concerns such as developmental strategies, debt relief and trade relations. Includes a survey of contemporary multilateral issues salient in the region, with particular focus on regional security concerns. Final exam or research paper. Prereq: None. Sem hrs: 3 fall.

Pol Sci 477. Politics of the Middle East. 3(1). Examines historic, cultural, economic, social, religious, and geographic traits that distinguish the region extending from North Africa through Central Asia and shape its domestic political processes and interstate relations. Surveys the governments of selected countries, considering factors such as legitimacy and political development. Includes a survey of contemporary multilateral issues with particular focus on regional security concerns. Final exam or research paper. Prereq: None. Sem hrs: 3 fall.

Pol Sci 479. Politics of Sub-Saharan Africa. 3(1). Examines historic, cultural, economic, social, religious, and geographic traits that distinguish the states of sub-Saharan Africa and their domestic political processes and interstate relations. Critically compares the politics, governments, and orientations of selected African states. Final exam or research paper. Prereq: None. Sem hrs: 3 fall of even years.

Pol Sci 481. American Elections and Political Parties. 3(1). Examines the nature of the electoral process and the roles that candidates, political parties, public opinion, and interest groups play in the process. Focuses on the role of candidates' election organizations, political parties, professional campaign managers, public opinion pollsters, professional fund raisers, and

media consultants in congressional and presidential campaigns. Special attention is given to the current presidential or congressional elections. Final exam or research paper. Prereq: None. Sem hrs: 3 fall of even-numbered years.

Pol Sci 482. The U.S. Supreme Court. 3(1). The Supreme Court is extremely influential in American politics, sometimes even acting as a policy-making body, deciding the fate of such contentious matters as abortion, capital punishment, public expressions of religious belief, and even a presidential election. We will study the Court's rulings in these areas and many others, focusing on the Court's written opinions, the thoughts of those who designed our government, and competing views about the Court's proper role in our system of separated powers. Final exam or research paper. Prereq: None. Sem hrs: 3 spring.

Pol Sci 483. The US Congress. 3(1). Studies Congress as a political institution, with an emphasis on the unique natures of the House and Senate, congressional norms and procedures, and the roles of committees and political parties. Topics include elections, member-constituent relations, national policy roles, leadership, the committee system, legislative procedures, legislative oversight of the executive branch, and the effects of public opinion and interest groups on law making. Final exam or research paper. Prereq: None. Sem hrs: 3 fall.

Pol Sci 484. The American Presidency. 3(1). Provides an in-depth study of the Presidency with emphasis on the post-World War II period. Examines the presidential selection process and the office and powers of the President as well as presidential administrative structures, styles, roles and personalities. Final exam or research paper. Prereq: None. Sem hrs: 3 spring.

Pol Sci 491. Capstone Seminar in Political Science. 3(2). This course is the culmination of the political science curriculum. It focuses on practical political and military issues. These include how soldiers have reacted in battle from ancient time to the present; how hierarchical authoritarian organizations operate, their strengths and weaknesses and what strategies tend to be successful for achieving positive outcomes; the relationship between capabilities and national strategies; and how personality, bureaucratic politics, perceptions, and experience shape policy. Final paper. Prereq: C1C Standing. Sem hrs: 3 spring.

Pol Sci 495. Special Topics in Political Science. 3(1). Selected topics in political science, taught in seminar format. One field trip per semester when appropriate local destinations are available. Final exam or final report. Prereq: None. Sem hrs: 3 fall or spring.

Pol Sci 496. Causes of War and Conflict Resolution. 3(1). This course examines the causes, conduct, and consequences of international conflict, interventions, crises, and wars. It also examines the theory and practice of conflict resolution. It uses wars from around the world, drawn from different historical periods, focusing on both theoretical and normative issues. Special attention will be paid to wars involving the United States, including ongoing interventions. Final exam, final paper, or final project. Prereq: None. Sem hrs: 3 spring.

Pol Sci 498. Political Science Thesis. 3(1). Cadets enrolled in this course will prepare a 50-75 page senior thesis under the guidance of the course director and other faculty members with particular expertise on the topic of research. This course combines the tutorial aspect of an

independent study (Pol Sci 499) with seminar on applied research methods. Cadets will meet individually or in seminar in accordance with a schedule determined by the course director. Formulation of thesis and research normally will begin in Pol Sci 300 and other political science courses. When the thesis has been completed, a formal defense will be given to a faculty committee in April or May. In preparation for the formal defense, each thesis will be presented to fellow cadets in the seminar for critique and evaluation. Research paper. Prereq: C1C standing and department approval. Sem hrs: 3 spring.

Pol Sci 499. Independent Study in Political Science. 3(0). Individual study or research of a carefully selected topic conducted on a tutorial basis. Research paper or a directed reading. Prereq: Soc Sci 212/412 and department approval. Sem hrs: 3 fall or spring.

- Pol Sci 499A. Independent Study. 2(0). Sem hrs: 2 fall or spring.
- Pol Sci 499B. Independent Study. 1.5(0). Sem hrs: 1.5 fall or spring.
- Pol Sci 499C. Independent Study. 1(0). Sem hrs: 1 fall or spring.

READING SKILLS (Read Skls)
Offered by Student Academic Services (DFRL)

Reading Skills 103. Reading Enhancement for First-Year Cadets. 2(1x). Designed to enhance reading efficiency for a wide variety of reading tasks, to include reading for academic courses, professional development, critical thinking, and reading for pleasure. Special emphasis is placed on use of core academic course texts for first-year cadets. Overall course goals include increasing reading rate, comprehension, and recall abilities. Course will meet twenty lessons. When registering for this course, please specify preference for taking course during first-half (e.g., Reading Skills 103) or second-half of semester (e.g., Reading Skills 103X). Reading Skills 103Z may be offered to international cadets upon request and approval by DFRL. Enrollees are granted two semester hours of credit. Although enrollees do not receive credit towards graduation, the course is intended to facilitate progress towards graduation. Pass/fail. Prereq: None. Sem hrs: 2 fall or spring.

Reading Skills 104. Reading Enhancement for International Cadets. 2(1x). Designed to enhance reading efficiency for international cadets for a wide variety of reading tasks, to include reading for academic courses, professional development, critical thinking, and reading for pleasure. Overall course goals include increasing reading rate, comprehension, and recall abilities. Special emphasis is placed on use of core academic texts. Vocabulary development will include Greek and Latin roots, prefixes and suffixes, words in context, collocations, and idiomatic expressions. Cross-cultural skills as they relate to reading will also be addressed. Course will meet twenty lessons. When registering for this course, please specify preference for taking course during first-half (e.g., Reading Skills 104) or second-half of semester (e.g. Reading Skills 104X). Enrollees are granted two semester hours of credit. Although enrollees do not receive credit towards graduation, the course is intended to facilitate progress towards graduation. Pass/fail. Prereq: None. Sem hrs: 2 fall or spring.

Reading Skills 201 or Reading Skills 201X. Reading Enhancement. 2(1x). Designed to enhance reading efficiency for a wide variety of reading tasks, to include reading for academic courses, professional development, critical thinking, and reading for pleasure. Overall course

goals include increasing reading rate, comprehension, and recall abilities. Course will meet twenty lessons. When registering for this course, please specify preference for taking course during first-half (e.g., Reading Skills 201) or second-half of semester (e.g., Reading Skills 201X). Enrollees are granted two semester hours of credit. Although enrollees do not receive credit towards graduation, the course is intended to facilitate progress towards graduation. If you received credit for Reading Skills 103, Reading Enhancement for First-Year Cadets, you may NOT enroll in Reading Skills 201. Pass/fail. Prereq: None. Sem hrs: 2 fall or spring.

SOCIAL SCIENCE (Soc Sci)

Offered by various departments within the Social Sciences Division

Soc Sci 212. Geopolitics. 3(1). This integrated course provides the primary experience to facilitate cadet understanding of the global environment into which they will be deployed. The global environment includes international relations, comparative politics, global gender roles, and culture, and examines how these factors influence global and national politics. Cadets will describe, interpret, and evaluate global political relations and formulate strategies for interacting in Western and non-Western cultures. This course is for Pol Sci majors only. It should be taken as early as possible in the Pol Sci major and is a core substitute for Soc Sci 412. Final exam. Prereq: None. Sem hrs: 3 spring.

In addition, this course/program is a primary contributor to the development and assessment of the following USAFA outcomes:

Responsibilities: Intercultural Competence

Knowledge: Civic, Cultural, and International Environments; National Security & Full Spectrum of Joint and Coalition Warfare

Soc Sci 400. Social Sciences Seminar. 3(2). Interdisciplinary course. An interactive seminar focused on relevant social sciences topics. Final paper, report or exam. Administered by the Social Science Division Chair. Sem hrs: 3 fall.

Soc Sci 401. Social Sciences Divisional Core Substitute. 3(0). This course can only be awarded for coursework accomplished during a semester of study abroad (CSSAP), international exchange (CSEAP), or service academy exchange (SAEP). With applicable Department Head or Division Chair approval, this course can fulfill the core requirement for Beh Sci 310, Mgt 400, or Soc Sci 412. Sem hrs: 3 fall or spring.

Soc Sci 412. Geopolitics. 3(1). This integrated interdisciplinary course provides the primary experience to facilitate senior cadet understanding of the global environment into which they will be deployed. The global environment includes international relations, comparative politics, global gender roles, culture, and physical process, and examines how these factors influence global and national politics. Cadets will describe, interpret, and evaluate global political relations and formulate strategies for interacting in Western and non-Western cultures. Final exam. Prereq: Pol Sci 211. Sem hrs: 3 fall or spring.

In addition, this course/program is a primary contributor to the development and assessment of the following USAFA outcomes:

Responsibilities: Intercultural Competence

Knowledge: Civic, Cultural, and International Environments; National

Soc Sci 420. Law and Economics. 3(1). An interdisciplinary course which examines various legal issues from an economics perspective. The course employs basic economic principles in an effort to understand the nature of legal rules, their effect on society and to suggest how these rules might be reformed. This framework is applied to tort law, criminal law, contract and property law. Final exam or final paper. Prereq: Econ 201. Law 220 recommended. Administered by DFL and DFEG. Sem hrs: 3 spring.

Soc Sci 483. Principles of Negotiation. 3(1). A study of the process of negotiation in a variety of situations ranging from negotiating one-on-one with family members to resolving complex multi-party disputes. Cadets will experience two distinct methods of negotiation: the distributive bargaining approach and the interest-based approach. They will prepare for, conduct, and analyze negotiations to include critical analysis of self and others. Listening as an essential capability is emphasized. Final report or final paper. Prereq: None. Offered by the Department of Law. Sem hrs: 3 fall or spring.

Soc Sci 495S. Statesmanship. 3(1). Capstone seminar course for the Academy Scholars Program focused on statesmanship. Final report or final paper. Sem hrs: 3 fall.

SPACE (Space Power Application, Capabilities, and Employment)
Offered by the Commandant of Cadets

Space 251. SPACE Student. 0(0). Introduction to Air Force Space Power Application, Capabilities, and Employment. Cadets will explore current AF space mission areas during this 10-day course. This course includes hands-on experience with selected operational space capabilities. Successful completion fulfills one requirement for award of the Cadet Basic Space Badge and one military training requirement. Pass/fail. Prereq: None. Sem hrs: 0 summer.

Space 350. Applied Satellite Operations & Engineering – Mission Qualified. 1(0). Attend appropriate education and training in order to become a certified satellite operator. This training is performed in the Space Systems Research Center (SSRC) at USAFA. The training culminates in a certification. Enrolled cadets perform assigned FalconSAT operations and engineering analyses in support of on-orbit satellite missions. Cadets usually complete a minimum of 15 missions to become certified. Enrolled cadets conduct pre-pass and post-pass analysis of satellite telemetry and payload data. Individual study and research is supervised by a faculty member. Mid-Term and Final Report. Prereq: Department approval. Sem hrs: 1 fall or spring.

Space 461. Applied Satellite Operations & Engineering – Sustained Operations. 1(0). After completing initial certification training, continue to perform assigned FalconSAT operations and engineering analyses in support of on-orbit satellite missions. Complete a minimum of 20 missions. Conduct pre-pass and post-pass analysis of satellite telemetry and payload data. In addition, this course has a mandatory requirement to become dual-qualified by learning a second crew position. An additional certification ride is required. Individual study and research is supervised by a faculty member. Mid-Term and Final Report. Prereq: Space 350 or department approval. Sem hrs: 1 fall or spring.

Space 472. SPACE Instructor. 0(0). Selected cadets serve as instructors for Space 251. Completion fulfills a military training leadership option. Pass/fail. Prereq: Space 461 and cadre approval. Sem hrs: 0 summer.

Space 473. Applied Satellite Operations and Engineering – Lead Engineer/Operator. 1(0). Enrolled cadets perform detailed analysis of satellite payload or telemetry data as either a lead engineer or operator. Lead engineer/operators publish or present a technical paper or article detailing the results of their research and continue to stay certified as a satellite operator by participating in assigned FalconSAT operations of on-orbit satellite missions. Individual study and research is supervised by a faculty member. Mid-Term and Final Report. Prereq: Space 461 or department approval. Sem hrs: 1 fall or spring.

SPACE OPERATIONS (Space Ops)
Offered by the Department of Astronautics

Space Ops 360. Space Mission Operations Fundamentals. 3(1). An introduction to the principles and problems of space operations. Elements of space operations are examined including operations management, planning, architecture, and execution. Orbital mechanics will be explored to include the topics of orbit determination and prediction, orbit maneuvers, perturbations, and rendezvous as they apply to space operations. Ground station hardware, software, and space communication principles are also explored. Final exam. Pass/Fail. Prereq: Astro Engr 310 and Astro Engr 331. Sem hrs: 3 spring.

Space Ops 461. Space Mission Operations I. 3(2). A second course in space operations. Advanced topics in space operations are discussed, such as satellite pass prediction, planning, and execution. Students interface with engineers and program managers in Small Spacecraft Engineering I (Astro Engr 436) to develop mission operations concepts and plans for current and future FalconSAT missions. Students maintain and operate ground equipment in support of on-going satellite operations. At the conclusion of this course, the student will be fully qualified to train future students in any of the three positions—Ground Station Operator, Satellite Operator, or Crew Commander. Final project. Pass/Fail. Prereq: Space Ops 360. Sem hrs: 3 fall.

Space Ops 462. Space Mission Operations II. 3(2). A third course in space operations. Advanced topics in space operations are discussed, such as ground station design and placement, ground support equipment design, and satellite communication subsystem design. Students interface with engineers and program managers in Small Spacecraft Engineering II (Astro Engr 437) and with operators at Schriever AFB to fully develop their understanding of mission operations concepts and plans for current and future FalconSAT missions. Students serve as trainers and mentors for students enrolled in Space Ops 360 and execute mission support for any active FalconSAT mission. Final project. Pass/Fail. Prereq: Space Ops 461. Sem hrs: 3 spring.

STUDY SKILLS (Stdy Skls)
Offered by Student Academic Services (DFRL)

Study Skills 101. Strategies for Academic Success. 2(1). Focuses on time management, study strategies, reading enhancement, information and memory processing, and additional topics related to improved academic performance. Enrollment consists primarily of fourth-class cadets, meeting a full semester. Enrollees are granted two semester hours of credit. Although enrollees do not receive credit towards graduation, the course is intended to facilitate progress towards graduation. Pass/fail. Prereq: None. Sem hrs: 2 fall.

Study Skills 102. Strategies for Academic Success (Abridged). 0.5(1x). This 15-lesson course teaches fundamental study strategies. Cadets will learn how to construct an efficient time management plan, take good notes, use effective listening skills, avoid procrastination, and read effectively. Course material is presented in a variety of modes, including tutorial software. Pass/fail. Sem hrs: 0.5 fall or spring.

SYSTEMS ENGINEERING (Sys Engr)

Sys Engr 301. Project Management 3(1). This course teaches how to properly plan, implement and control organizational activities, personnel and resources. Topics include project selection, roles and responsibilities of the project manager, planning, budgeting, scheduling, allocating resources, monitoring/controlling, evaluating/terminating, and risk assessment/management of the project. Additional topics address how to structure the organization and allocate human resources. Case studies illustrate problems and how to solve them. Course assignments are designed to help students learn and apply project management techniques taught in the course.
The class design project will provide students with the opportunity to integrate project management software, Microsoft Project, into the preparation of a project plan for an engineering project. Students will also use Monte Carlo simulation to evaluate product uncertainty. Administered by the Department of Management. Final project. Prereq: None. Sem hrs: 3 spring.

Sys Engr 310. Introduction to Systems Engineering. 3(2). This course presents an introduction to the systems engineering process and the development lifecycle as a foundation for solving complex problems to fulfill end user needs. The course focuses on the systems engineering lifecycle process that includes design, concurrent engineering, software engineering, and the concepts of reliability, maintainability, and availability. Skills and tools are presented that are foundational in the development of interdisciplinary systems engineers. In parallel with the course material, a semester-long system development project facilitates application of systems engineering principles. Final project. Prereq: Engr 101. Sem hrs: 3 fall or spring.

Sys Engr 311. Systems Engineering II: Analytic Techniques for Systems Engineers. 3(1). Studies analytic techniques for alternatives analysis and system development. This course teaches how to model uncertainty; rational decision making principles; representing decision problems with value trees, decision trees, and influence diagrams; solving value hierarchies, decision trees and influence diagrams; defining and calculating the value of information; incorporating risk attitudes into analysis; and conducting senstitivity analyses. This course also integrates life cycle costs into the decision making making framework. Administered by the Department of Management. Final exam or final project. Prereq: Sys Engr 310. Coreq: Math

300, Math 356 or Math 378. Sem hrs: 3 Spring

Sys Engr 336. Engineering Economics and Financial Management. 3(1). A study of financial decisions and their effects on organizations. This course prepares students to consider the economic dimension in the evaluation of engineering alternatives--a consideration vital to the Systems Engineering Lifecycle, engineering management, systems acquisition and many other application areas. Emphasis is on developing the concept of risk/return tradeoff as well as inter-cost temporal monetary tradeoffs. After an introduction to accounting concepts, topics will include cost analysis, breakeven analysis, time value of money, project analysis/capital budgeting (including annual equivalence), interest rates, economic service life, and the weighted average cost of capital. Case studies and problems expose the student to current financial problems and their solutions. This course presumes no prior knowledge of accounting. Credit will not be given for both Sys Engr 336 and Mgt 337. Administered by the Department of Management. Final exam or final project. Prereq: None. Sem hrs: 3 spring.

Sys Engr 373. Introduction to Human Factors Engineering. 3(1). This course examines the process, principles, and guidelines of human factors engineering as they impact the design of systems used by people and provides an introduction to human factors engineering and Systems Design. Emphasizes the interaction between human capabilities and limitations, to the task, and the environment, as they relate to system performance. Final exam or final project. Prereq: Beh Sci 110. Sem hrs: 3 spring.

Sys Engr 402. Professional Systems Engineering Development. 0.5(1). Review of Systems Engineering principles; acquisition life cycle stages; technical, project, agreement, organizational, and tailoring processes; and specialty engineering activities in preparation for the internationally-recognized Associate Systems Engineering Professional with Acquisition Extension (ASEP-Acq) certification exam administered at the end of the course by the International Council on Systems Engineering (INCOSE). Targeted towards Systems Engineers and who will support or work in a Department of Defense acquisition environment. An annual INCOSE membership fee must be paid by the student to take the exam and maintain or improve the certification; therefore, taking the exam is not required. Note: Defense Acquisition University SYS 101 (Fundamentals of Systems Planning, Research, Development, and Engineering) and SYS 202 (Intermediate Systems Planning, Research, Development, and Engineering, Part I) course completion credit will be awarded once ASEP-Acq certification is achieved. Prereq: C1C standing. Pass/fail. Sem hrs: 0.5 spring.

Sys Engr 405. Systems Engineering Colloquium I. 0(1). The course is designed to give Systems Engineering majors an exposure to the wide applicability of their common knowledge and to share knowledge across the various capstone design projects. The course is also designed to help transition Systems Engineering majors to duties as an AF officer and systems engineering professional. Students will make one graded presentation about their specific capstone experience. Invited speakers will discuss current issues in large completx systems and typical engineering and management problems which cadets may encounter during their capstone design and after graduation. Prereq: C1C Standing. Pass/fail. Sem hrs: 0 fall.

Sys Engr 406. Systems Engineering Colloquium II. 0(1). The course is designed to give

Systems Engineering majors an exposure to the wide applicability of their common knowledge and to share knowledge across the various capstone design projects. The course is also designed to help transition Systems Engineering majors to duties as an AF officer and systems engineering professional. Students will make one graded presentation about their specific capstone experience. Invited speakers will discuss current issues in large completx systems and typical engineering and management problems which cadets may encounter during their capstone design and after graduation. Prereq: C1C Standing. Pass/fail. Sem hrs: 0 spring.

Sys Engr 460. Unmanned Aerial Vehicle-Remotely Piloted Aircraft (UAV-RPA) Systems. 3(2). An introduction to unmanned aerial vehicle-remotely piloted aircraft (UAV-RPA) systems and the systems engineering processes used to build them. Topics include air vehicles and capabilities, ground control stations, payloads, personnel training, and support systems. Students will work on an interdisciplinary team to build, fly, and test one or more UAV-RPA systems. Final project. Prereq: Course Director approval. Sem hrs: 3 spring.

Sys Engr 470. Human Systems Integration. 3(1). This course examines how Human Systems Integration (HSI) plays a critical role in the design, production, and implementation of military systems. Although certain systems are designed for uses that may be unique to a particular armed forces organization, the principles and applications discussed are (as far as possible) generic, and can therefore be applied to almost any weapons system design program. The course examines HSI as a Systems Engineering (SE) discipline and why HSI must be a core component of Systems Engineering. Students review the major HSI-related areas of concern (domains) that should be assessed when designing, producing, and implementing a system. Final project or final exam. Prereq: Sys Engr 310, Sys Engr 373, or department permission. Sem hrs: 3 spring.

Sys Engr 477. Operations Engineering and Management 3(1). This course deals with the quantitative aspects of design and analysis of production and service operations engineering and management within the Systems Engineering Lifecycle. Emphasis is on identification, analysis, and solution implementation of operations problems using applied quantitative techniques. Practical exercises reinforce the problem-solving techniques necessary for today's successful military engineering managers and systems engineers. Specific methods and techniques taught and applied are operations strategy, product design and selection, supply chain management, quality management, reliability, maintainability and capacity planning. This course also introduces basic concepts of modeling complex discrete systems by computer simulation as a key tool in analyzing and improving operations. Administered by the Department of Management. Final exam or final project. Prereq: Math 300, Math 356, or Math 377 and Math 378. Sem hrs: 3 fall.

Sys Engr 491. Systems Engineering Capstone Design I. 3(2). The capstone design experience for Systems Engineering majors. The emphasis placed on execution of the systems engineering process over the entire development lifecycle of a complex system. Students will be placed in systems engineering roles on existing capstone design projects in various departments. Students will apply the systems engineering tools acquired in their previous systems engineering coursework. Final project. Prereq: C1C in good standing in Sys Engr major, Sys Engr 301, and Sys Engr 310. Sem hrs: 3 fall.

Sys Engr 492. Systems Engineering Capstone Design II. 3(2). Continuation of Sys Engr 491. Final project . Prereq: Sys Engr 491. Sem hrs: 3 spring.

Sys Engr 495. Special Topics in Systems Engineering. 3(1). Selected topics in systems engineering. Final exam or final report. Prereq: Sys Engr Program Director approval. Sem hrs: 3 fall or spring.

Sys Engr 499. Independent Study. 3(0). Individual study, research, or design supervised by a faculty member. Topic established with the permission of the Department Head. Prereq: Department approval of USAFA Form O-498 prior to enrollment. Final report. Sem hrs: 3 fall or spring.

- Sys Engr 499A. Independent Study. 2(0). Sem hrs: 2 fall or spring.
- Sys Engr 499B. Independent Study. 1.5(0). Sem hrs: 1.5 fall or spring.
- Sys Engr 499C. Independent Study. 1(0). Sem hrs: 1 fall or spring.

CHAPTER 13

DEFINITION OF TERMS

ACADEMIC COURSE: A graded course yielding college credit, usually under the supervision of the Dean of the Faculty; however, the Commandant of Cadets (CW) and the Athletic Department (AD) also supervise a few academic courses. The 306 Flying Training Group administers Airmanship courses. The Director of Athletics oversees Phy Ed academic courses.

ACADEMIC DAY: There are 80 academic days in a semester, divided equally as "M" or "T" days. Each day consists of seven 53-minute class periods. Academic Call to Quarters (ACQ), as listed in the current Cadet Wing Schedule of Calls, is also considered part of the academic day.

ACADEMIC DIVISION OPTION: Any graded course taught for credit under the supervision of the Dean of the Faculty or the Director of Athletics. Courses must carry at least three semester hours of credit and be graded. The courses include the course offerings of the Basic Sciences, Engineering, Social Sciences, and Humanities divisions. The core preparatory courses, Math 130 and English 109, do not normally fulfill this requirement. These courses may be included at the discretion of the Division Chair (Divisional Major) or Department Head (Disciplinary/Interdisciplinary Major).

ACADEMY OPTION: Any course taught for credit under the supervision of the Dean of the Faculty, Commandant of Cadets, or the Director of Athletics. Courses must carry at least three semester hours of credit. Academy Options may include Math 130, English 109, Armnshp 461, Armnshp 491, or any three semester hour non-core course. Each major (divisional, disciplinary, and interdisciplinary) will have one Academy Option.

ADVANCED COURSE: An academic course of similar content to another course, but covers material in significantly greater depth (e.g., Math 356 is an advanced substitute for Math 300).

ALTERNATE COURSE: Any course taken in place of another course to fill the core or major's requirements for that course (see Chapter 7 for details).

CONCURRENT: See Corequisite.

CONDITIONAL TURNBACK: A cadet who has experienced severe academic difficulties and will probably require a ninth semester in residence to meet graduation requirements. The Academy Board makes the designation on an individual basis. A cadet in conditional turn back status must graduate with a divisional major or in the Bachelor of Science Program and be minimally loaded each semester. A cadet in conditional turn back status who earns at least a 2.40 cumulative or semester grade point average may take a sixth course as an overload during the next semester. Cadets will remain in conditional turn back status until they graduate, unless they fail to meet graduation requirements by the end of the calendar year in which their original class graduated. At that time, the Academy Board will transfer them to the next succeeding

class, and they will be designated as turn backs. Cadets may petition to be removed from conditional turn back status by submitting a formal letter of request to the appropriate Academic Review Committee Chair.

CORE COURSE: A course all cadets must take for graduation. Advanced courses, honors courses, or validation/transfer credit may fill core requirements (see Chapter 7 for details).

CORE REPLACEMENT: For accreditation-constrained majors (Chem, BioChem, Mat Chem, Comp Sci, Comp Sci IA, Aero Engr, Astro Engr, Civ Engr, Comp Engr, El Engr, Env Engr, Mech Engr, and Sys Engr) requiring at least 15 major's courses beyond the core, the 15th course is to be accommodated by using the Academy Option for a major's course. For accreditation-constrained majors requiring 16 major's courses beyond the core, the 16th course is to be accommodated by using a core replacement. A core replacement is a major's course that replaces an otherwise-required core course in order to accommodate including 16 major's courses in a 47-course total sequence. Replaced core courses are to be at the end of developmental core sequences in order to preserve the developmental nature and design of the core curriculum.

CO-REQUISITE: Course may be taken earlier or at the same time with, but no later than, another.

COURSE: A body of instruction in the USAFA curriculum. Courses may be academic or non-academic, graded or non-graded, core or major, advanced, audited, repeat, continuing, substitute or overload.

DELAYED COURSE: A core course taken in a later semester than found in the normal sequence for the particular class. Authorization to delay a core course must be approved by the appropriate department head. Delayed courses must be taken in the semester approved by the department head (see Chapter 7, Core Sequences).

DISCIPLINARY MAJOR: A major with a specific area of concentration which requires 42-52 semester hours beyond the core. Refer to Chapter 10 for requirements of offered majors.

DIVISIONAL MAJOR: A major with a general area of concentration which requires 36 semester hours beyond the core. Refer to Chapter 9 for requirements of individual majors.

ELECTIVE COURSE: Any course a cadet elects to take beyond the mandatory core curriculum.

FINAL EXAMINATION: An evaluation covering an entire course. It requires two or more hours to complete and counts for at least 25% of the course grade. See the course description portion of this handbook to find out which courses require a final examination. Unless waived by the Vice Dean, courses listing a final examination must have an in-class examination during the final examination periods. NOTE: Cadets who resign at the end of semester will receive course credit only if all finals/final projects are completed.

FINAL PROJECT: A project covering an entire course and counting for a significant percentage

of the course grade. See the course description portion of this handbook to find out which courses require a final project. Unless waived by the Vice Dean, final projects must be turned in no later than the last day of regularly scheduled classes. Final projects will not be scheduled for turn-in during the final examination period. NOTE: Cadets who resign at the end of semester will receive course credit only if all finals/final projects are completed.

GRADED COURSE: A course for which a grade of A, A-, B+, B, B-, C+, C, C- or D is awarded upon successful completion. Grades of F (failing), W (withdrawn), WP (withdrawn passing), WF (withdrawn failing), and I (incomplete) may also be awarded at the end of a graded course. An N grade may be awarded to reflect no grade available for a continuing graded course. For more information, see Chapter 4.

GRADED REVIEW (GR): An evaluation covering material taught during several periods of instruction. It carries weight equal to two or more quizzes. The extent of the material and the approximate weight assigned to each GR are announced before the examination. If cadets are scheduled for more than two GRs on the same day, they may complete the additional GR(s) during free periods on the opposite day of the same lesson number with appropriate department head approval. See USAFAI 36-183, Evaluating and Distributing Cadet Grades.

GRADUATION (ON TIME): Graduating in eight (8) semesters with the cadet's incoming class. This graduation ceremony occurs in May/June of each year. Cadets must graduate on time, even if it means dropping their major from disciplinary to divisional. Only the Academy Board may make a cadet a late graduate (see Late Graduation for further explanation).

LATE GRADUATION: Graduating after the May/June ceremony held for the cadet's incoming class. Late graduation occurs at the end of the summer term and in December. Only the USAF Academy Board may make a cadet a late graduate.

MAJOR'S COURSE: A course taken to satisfy the requirements for an academic major.

NON-GRADED COURSE: A course for which a grade of P (passing) is awarded upon successful completion. Grades of F (failing), W (withdrawn), WP (withdrawn passing), WF (withdrawn failing), and I (incomplete) may also be awarded at the termination of a non-graded course. An N grade may be given in continuing courses. N grades may also be given in Mil Tng 100 (BCT) and Mil Tng 270 (ESET) when cadets are physically unable to complete one or more phases of the program. A non-graded course may also be designated a pass-fail course.

NORMAL COURSE LOAD: The number of semester hours of academic courses and/or non-academic courses which a cadet may take without regard to grade point average. For further information see Chapter 2.

OVERLOAD: Overloads are courses taken in excess of the normal course load. Cadets fulfilling overload requirements may take an overload after their first year at USAFA. For specific course load information, see Chapter 2.

PASS-FAIL COURSE: See Non-Graded Course.

PREREQUISITE: A course which serves as a foundation for another course and is therefore required to be taken in an earlier semester.

QUIZ: An evaluation which covers material taught in a small unit of instruction. Normally, it requires less than half of one class period to complete. Quizzes may be one of two types: (1) departmental quizzes, designed by a committee or the course director and administered to all cadets meeting the course on the same day, or (2) instructor quizzes, designed by the individual instructor and administered at the instructor's discretion during any class meeting not scheduled for a departmental quiz or graded review.

SPECIAL TOPICS COURSE: Each academic discipline may offer an academic course with the content varying semester to semester, based on cadet or department desires and needs. Such a course is designated "--------495. Special Topics." In late spring, the editor of the *Curriculum Handbook Supplement* publishes a complete listing and description of all special topics courses for the upcoming fall semester. Spring offerings are published in late fall.

SUMMER ACADEMIC COURSES: Cadets may volunteer or be directed by an Academic Review Committee to take an academic course in lieu of summer leave. Registration for summer academics is in February and March of each year.

TRANSFER CREDIT: Credit given for college-level courses equivalent to Academy courses but taken at another accredited college, university, or secondary school. A cadet must request this credit and submit a transcript. Transfer credit standards are the following:

a. A grade of "B" or higher is generally required for transfer credit for any course in the curriculum.
b. A grade of "C" or higher is acceptable for transfer credit for any terminal course which is not a prerequisite for other courses in the curriculum.
c. Departments giving mandatory placement examinations to the incoming fourth class may give transfer credit for core courses when the combination of scores on entrance or placement examination and prior course work is justified even though the course grade is below "B". A department head may ask the Dean of the Faculty to request the Office of Student Academic Affairs withdraw transfer credit. All transfer/validation credits may be applied toward graduation requirements; however, at least 131 semester hours must be taken at USAFA (or USAFA-sponsored exchange programs) to meet minimum requirements. Transfer/validation credit is coordinated with academic departments by DFRR.

TURNBACK: A cadet who has been transferred from one class to the next succeeding class (e.g., medical, administrative). If a cadet in deferred turn back status fails to meet graduation requirements by the end of the calendar year in which the cadet's original class graduates, the Academy Board will transfer the cadet to the next succeeding class and the cadet will be designated as a turn back.

UNDERLOAD: A course load less than minimum requirements reflected in Chapter 2.

VALIDATION CREDIT: Credit given for passing a validation examination or as a result of completing an accelerated or advanced course. A cadet who has passed college-level courses for which transfer credit is not awarded or who has extensive knowledge of a subject acquired without a formal course may be able to pass a validation examination. Validation examinations for fourth-class core courses are usually scheduled in the summer. For other courses, a cadet petitions the appropriate department and may be given an examination if the cadet can furnish evidence to indicate that he/she has a reasonable chance of passing. Occasionally, an academic department may invite a cadet to take the examination. A cadet who passes a validation examination or who makes an acceptable score on a College Board Advanced Placement examination may also earn validation credit. Departments certify this credit to the Office of Student Academic Affairs, Customer Service and Academic Scheduling (DFRR). The various academic departments may award validation credit in any academic course (excluding Special Topics and Independent Studies courses). Except for core courses, validation credit may not be awarded later than a cadet's sixth semester. No cadet may be given validation credit for a course after attending any class meetings for the same course without expressed approval of the Dean of the Faculty. All transfer and validation credits may be applied toward graduation requirements; however, at least 131 semester hours must be taken at USAFA (or USAFA-sponsored exchange programs) to meet minimum residency requirements.

WACQ: A WACQ (Weekend Academic Call to Quarters) is a 60-minute period of **supervised** study beyond normal Academic Call to Quarters and required study consultations outlined on the USAFA Form 68. Most often WACQs are accomplished on the weekend and validated weekly by Cadet Academic Officers (CADOs). WACQs are assigned to every cadet on academic probation every grading cycle. CADOs are responsible for assigning the correct number of WACQs to be accomplished each week based upon the probationary cadet's performance using the formula provided on the USAFA Form 68. For every F grade earned the previous grading cycle, a probationary cadet will be assigned 3 WACQs per week. For every D grade earned, 2 WACQs will be assigned per week of probation. For every C- grade earned, 2 WACQs will be assigned per week of probation. Every cadet on academic probation will be assigned an additional 1 WACQ per week of probation. In most cases, 7 academic weeks will exist from the time grades are posted to the time of end of the next grading period. Specifically, if a cadet is on academic probation for a single F grade, the total number of WACQs would be (1+3) x 7 = 28. The 'x 7' in block 4b of the USAFA Form 68 refers to the approximate number of weekends until the next grading cycle (prog or final grades). Therefore, the expectation is that the cadet will serve 4 WACQs each weekend for the next 7 weekends because of the F grade earned. The cadet can always study more on a given weekend, but that would not relieve the cadet from having **supervised** study for the minimum 4 WACQs each weekend until the next grading cycle. CADOs are expected to provide guidelines for supervised study that help the probationary cadets achieve academic excellence. A probationary cadet may receive credit for 1 WACQ by spending 1 hour in EI with an instructor beyond what is prescribed on the Form 68, at the cadet writing center, at the QRC, or with a squadron assigned tutor during the week. However, all WACQs must be validated as supervised study by the CADO each week. All WACQs must be accomplished and validated by the CADO before probationary cadets are allowed to utilize passes.

INDEX
2012-2013 Curriculum Handbook

AAOCA, 22
Academic Advising, 22
Academic Course, 359
Academic Day, 359
Academic Div Option, 359
Academic Graduation Requirements, 18
Academic Records, 25
Academic Requirements. *See* Graduation Requirements
Academic Review Committee, 51
  AD Representative Responsibilities, 59
  Advisor Responsibilities, 57
  AOC Responsibilities, 57
  Cadet Academic Deficiency Evaluation and Probation Action Plan, 58
  Cadet Responsibilities, 58
  Class Attendance, 62
  Coordinator Responsibilities, 57
  Directives, 56
  Disenrollment, 60
  End of Semester, 56
  Instructor Responsibilities, 59
  Medical Staff Responsibilities, 59
  Mid-Semester, 56
  Procedures, 59
  Readmission, 62
  Recommendations, 56
  Title 10 Re-exam, 61
  USAFAI 36-3523, 57
  Waive Rights to Appeal, 60
Academic Schedule, 41
Academic Waivers, 34
  Approval Authority, 34
Academy Option, 359
Academy Scholars Program, 78
Accreditation, 106
ACPRO, 27, 51
  3 Sequential Deficient Sem, 52
  Going on ACPRO, 52
  Low GPA, 52
  Multi Pro, 52
  Multiple Deficient Sem, 52
  Multiple F, 51
  Removal from ACPRO, 55
  Repeat F, 51
  Two Sequential Deficient Sem, 52
  Underload, 52
  USAFA Form 68 (Cadet Academic Deficiency Evaluation and Probation Action Plan), 57
Activity Codes, 27
Adding a Course, 32
Admin Squadron, 326
Advanced Course, 359
Advisor Responsibilities, 33
Advisor-in-Charge (AIC) Responsibilities, 22
Aeronautical Engineering Major, 117–21
  course descriptions, 226–30
Aerospace Physiology. *See* Biology Major
AETC Leadership, 329
AF Special Tactics Orientation, 327
Airmanship, 83
  Coordination, 32
  Disenrollment/Withdrawal, 48
Alternate Course, 359
Appelate Procedures, 46
APS (Academic Program Summary), 27
ARC. *See* Academic Review Committee
Army Air Assault, 327
Army Airborne, 327
Astronautical Engineering Major, 122
  course descriptions, 234–37
At-Risk Cadets, 25
At-Risk Program, 77
  Criteria, 77
  Procedures, 77
Audit, 35
  Audit Request Letter, 36
Bachelor of Science Program, 224
  How to Declare, 105
Basic Cadet Training, 325
Basic Meteorology Program, 86
BCT Cadre, 328
BCT Group Staff, 328
Behavioral Sciences Major, 126
  course descriptions, 237–38
Biochemistry, 138
Biology Major, 131–35
  Cellular and Molecular Biology, 133
  course descriptions, 238–46
  Environmental and Organismal Biology, 133
  Human Biology, 133
  Professional or Advanced Degrees, 134
BSA Philmont Ranger, 327
Cadet Academic Deficiency Evaluation and Probation Action Plan, 58
  USAFA Form 68, 58
Cadet EMT, 329
Cadet Semester Exchange Abroad Program
  Chilean Exchange Transfer Credit Matrix, 73
  French Exchange Transfer Credit Matrix, 74
  German Exchange Transfer Credit Matrix, 75
  Spanish Exchange Transfer Credit Matrix, 76
Cadet Wing Leadership, 329
CAMIS, 34
CAMIS II, 26
Changes to Current Semester, 31
Character Development, 17
Character Development Graduation Requirements, 19
Chemistry Major, 137
  course descriptions, 246–55, 246–55
Chilean Exchange Transfer Credit Matrix, 73
Civil Engineering Field Engineering and Readiness Lab, 327
Civil Engineering Major, 142
  course descriptions, 255–60
COAP Table 7-1.. *See* Core Curriculum
Commissioning Education, 17, 18

Computer Engineering Major, 146
course descriptions, 269–73, 269–73
Course Flow Figure, 150
Computer Science Major, 152
course descriptions, 261–62, 261–62
Conditional Turnback, 359
Contact Hour and Scheduling Pattern Codes, 225
Contact Hours, 25
Core, 360
Organization and Sequencing by Content Area and Class Year, 89
Core Curriculum and Outcome Alignment Plan, Alternate, Table 7-2.. *See* Core Curriculum
Core Replacement, 360
Co-requisite, 360
Course, 360
Course Descriptions, 225
Aeronautical Engineering, 226
Airmanship, 230
Area Studies, 234
Astronautical Engineering, 234
Basic Sciences, 237
Behavioral Sciences and Leadership, 237
Biology, 242
Center for Character Development, 246
Chemistry, 250
Civil Engineering, 255
Commissioning Education, 260
Computer Science, 261
Economics, 265
Electrical and Computer Engineering, 269
Engineering, 274
Engineering Mechanics, 275
English, 277
Fine Art, 281
Foreign Area Studies, 283
Foreign Languages, 286
Geospatial Science, 292
History, 294
Humanities, 301
Law, 303
Management, 306
Math, 311
Mechanical Engineering, 317
Meteorology, 319
Military Strategic Studies, 321
Military Training, 325
Operations Research, 331
Parachuting, 233
Philosophy, 333
Physical Education, 336
Physics, 341
Political Science, 345
Powered Flight Program, 232
Reading Skills, 351
Remotely Piloted Aircraft, 230
Soaring, 231
Social Science, 352
Space, 353
Space Operations, 354
Study Skills, 354
Systems Engineering, 355
Course Drop Timeline, 33
Course Loads, 32
Course offerings, 25
Cumulative GPA, 48
Curriculum
Academic Major's Offered. *See* Majors/Minors
Academic Programs. *See* Selecting a Major
Chemistry Placement, 91
Core. *See* Core
Core Courses by Division, 90
Core Preparatory Courses. *See* ESL, At Risk
Core Prerequisites, 93
Core Requirements, 90
Core Sequence. *See* Fourth Class Placement
Core Substitutes, 91
Math Placement, 91
Phy Ed Graduation Requirements. *See* Grad Requirements
USAFA Outcomes, 96
Curriculum Change Control, 16
Cyber, 82
Dean's List, 49
Delayed Course, 360
Disciplinary Major, 360
Disenrollment, 60
Notification, 61
Title 10 Re-exam, 61
Divisional Major, 360
Double Major. See Majors/Minors
Double-Period, 43
Dropping a Course, 32
Economics Major, 155–57
course descriptions, 262–69, 262–69
Elective Course, 360
Electrical Engineering Major, 158
course descriptions, 269–73, 269–73
Course Flow Figure, 162
English as a Second Language (ESL), 40
English Major, 163
course descriptions, 277–81, 277–81
Environmental Engineering Major, 165
ESL, 72
Excusal Codes, 44
Experimental Courses, 43
Extra Instruction, 78
Faculty Operating Instruction 50-3, 20
Falconry, 329
Final Exam, 40, 360
ESL, 40
Offerings, 40
Religious Accommodation, 40
Final Project, 360
Foreign Area Studies Major, 169
course descriptions, 283–86
Foreign Language Minor, 172
course descriptions, 283–92, 283–92, 283–92, 283–92, 283–92, 283–92
French Exchange Transfer Credit Matrix, 74
Geospatial Science Major, 174
course descriptions, 292–94
German Exchange Transfer Credit Matrix, 75
Get Well Plan, 60

GR, 361
Grad Check
Course Substitutes. *See* Graduation Requirements
Grade Protection, 94
Graded Course, 361
Graded Review, 361
Grading, 45
Appelate Procedures, 46
Final Grades, 45
Grade Changes, 45
OPA, 49
Repeat Courses, 48
Special Grades, 46
Spring/Summer Recompute, 48
USAFA Instruction 36-3504, 46
Graduation, 361
Graduation Check, 27
Graduation Recognition, 49
Graduation Requirements, 18
History Major, 179
course descriptions, 294–301
Honor Lists and Probation, 49
Honor Staff, 330
Idea Program, 43
Independent Study, 34
In-Residence Graduation Requirements, 18
International Cadets
ESL (English as a Second Language), 19
Internship, 331
Jump, 83
Late Grad, 361
Legal Studies Major, 184
course descriptions, 303–6
Low GPA Review, 52
Major's Course, 361
Major's GPA, 49
Majors' Night, 103
Majors/Minors
Aeronatuical Engineering, 118
Astronautical Engineering, 122
Basic Sciences, 108
Behavioral Sciences, 126
Biology, 131
Changing a Major, 103
Chemistry, 136
Civil Engineering, 142
Computer Engineering, 146
Computer Science, 152
Declaring, 103
Declaring a Minor, 104
Disciplinary/Interdisciplinary Majors and Minors, 117
Divisional Majors, 107
Double Major, 105
Economics, 155
Electrical Engineering, 158
English, 163
Environmental Engineering, 165
Foreign Area Studies, 169
Foreign Languages, 172
General Engineering, 111
Geospatial Science, 174
History, 179
Humanities, 113
Legal Studies, 184
Majors' Night, 103
Management, 186
Mathematics, 189
Mechanical Engineering, 192
Military & Strategic Studies, 200
Operations Research, 203
Philosophy, 206, 208
Physics, 209
Political Science, 212
Religion Studies Minor, 214
Social Sciences, 115
Space Operations, 216
Systems Engineering, 218
Management Major, 186
course descriptions, 306–10
Marine Bulldog, 327
Master Course File, 27, 34, 40
Materials Chemistry, 138
Mathematics Major, 189
course descriptions, 310–16, 310–16
Maximum Course Loads, 26
Mechanical Engineering Major, 192
course descriptions, 316–18
Med School, 84
Media Staff, 330
Medical Leave, 330
Military & Strategic Studies Major, 200
Military Graduation Requirements, 27
Military Strategic Studies Application Laboratories, 331
Military Strategic Studies Major
course descriptions, 321–25
Minimum Course Load, 25
Minimum Enrollment, 44
Mission Support Group, 329
MSS, 200
Multiple Deficient Semesters, 52
Multiple Failures, 51
Multiple Probations, 52
Navy Programs, 327
Non-Graded Course, 361
Normal Course Load, 361
Official Transcripts, 25
OPA, 49
Operation Air Force Group Staff, 328
Operations Group, 328
Operations Research Major, 203
course descriptions, 331–33
Ops Research, 203
OpsAF-3Lt, 326
OpsAF-Brevet Lt, 326
OpsAF-International Students, 326
Overall Performance Average, 49
Overload, 361
Philosophy Major, 206
Philosophy Minor, 208
course descriptions, 333–35, 333–35
Phy Ed Course Requirements. *See* Curriculum, Phy Ed
Physical Education, 42
course descriptions, 335–41
Physical Education Average, 19

Physical Education Graduation Requirements, 19, 28
Physics Major, 209
course descriptions, 341–45
Political Science Major, 212
course descriptions, 345–51
Preliminary Course Offering Information (PCOI), 40
Prep School BCT Cadre, 327
Prerequisite, 362
Program planning, 25
Q2, 26
Q2i On-Line, 29
Quality Points, 45
Quiz, 362
Readmission Program, 62
Registration, 21–39
After Registration Deadline, 28
Audit Course, 35
Directed Changes. See ARC
Fall/Spring, 28
Four Types, 28
Fourth Class Placement. *See* Curriculum, Core
Future Semesters. *See* On-Line Registration
Lesson 1 Changes, 32
Manual Changes - APS. *See* APS
Summer, 28
Registration Periods, 21
Religion Studies Minor, 214
Repeat "F", 48
Repeating a Course, 48
Replace an "F", 48
Request for Permission to Enroll in an Independent Study Course, 39
Residency, 18
SAME/USAFA Engineering and Construction Camp, 328
Scheduling, 40, **Error! Not a valid bookmark in entry on page** 43
Pattern Codes, 225
Unusual Schedules. *See* PCOI
Scholarship Preparation, 85
Selecting a Major, 102, 103
Soaring, 83
Space Operations Major, 216
course descriptions, 354
Spanish Exchange Transfer Credit Matrix, 76
Special Leave, 330
Special Programs, 68–87
Airmanship, 83
Cadet Semester Exchange Abroad Program, 68
Cyber, 82
Extra Instruction, 78
Graduate School Program, 83
Health Professions, 84
Hospital Instruction, 77
Legal Training, 84
National Competitive Scholarship Program, 83
Service Academy Exchange Program, 72
Special Topics, 362
Special Topics Courses, 35
Sports Camp, 329
Spring/Summer Recompute, 48
Student Academic Services, 43, 351, 354
Study Skills, 43
Summer Ac, 362
Summer Academics, 45
Summer Leave, 330
Summer Programs, 325–31
Summer Seminar, 327
Systems Engineering Major, 218
course descriptions, 355–58, 355–58
T Symbol. *See* Transfer Credit
Title 10 Re-Exam. *See* ARC
Training Wing Operations Center (TWOC), 327
Transfer, 362
Transfer Credit, 48
Transfer/Validation Credit, 19
Turnback, 362
Two sequential semesters, 52
Underload, 362
Underloaded third classmen, 52
Unusual Schedules, 42
USAFA Form 69, 34, *See* APS
USAFA Form O-498, 21
USAFA Instruction 36-3523, 61
USAFA Outcomes, 96
V Symbol. *See* Validation Credit
Validation, 363
Validation Credit, 48
Very Low GPA, 51
WACQ, 363
Waiver Request Form, 37
Wing Summer Support, 326, 329